NO. 72 NOTES FROM THE SHOP $3.95

Woodsmith®

Bent Lamination
Walnut Hall Tree & Fern Stand

Plus: Helpful Tips For Your Radial Arm Saw

No. 72 December, 1990

Woodsmith®

Editor Donald B. Peschke
Design Director Ted Kralicek
Managing Editor Douglas L. Hicks
Assistant Editors Terry J. Strohman, James M. Dolan, Richard S. Peters, Gordon Gaippe
Project Designer Ken Munkel
Illustrators David Kreyling, Cary Christensen, Rod Stoakes, Chris Glowacki, Dirk Ver Steeg
Circulation Director Liz Bredeson
Graphics Director Jon Snyder
Project Supplies Leslie Ann Gearhart
Customer Service Mgr. Linda Morrow
Customer Service Linda Jones, Kelly Bradford, Scott Rhodes, Genelle Branson, Vicki Edwards, Mic Smith, Jennie Enos, Janice Kerkove, Jozlyn Pross, Jerry Vancini, Roberta Rush
Controller Paul E. Gray
Bookkeeping Linda O'Rourke
Network Administrator Douglas M. Lidster
Administrative Assts. Cheryl A. Scott, Sandy Baum
Sourcebook Jean Myers, Kent A. Buckton
Shop Manager Steve Curtis
Building Maintenance Ken Griffith, Archie Krause
Store Managers:
Berkeley, CA Michael DeHaven
Des Moines, IA Kent Welsh

Woodsmith® (ISSN 0164-4114) is published bimonthly (Feb., April, June, Aug., Oct., Dec.) by Woodsmith Publishing Company, 2200 Grand Avenue, Des Moines, IA 50312. Printed in the U.S.A.
Woodsmith® is a registered trademark of Woodsmith Publishing Company.
©Copyright 1990 by Woodsmith Publishing Company. All rights reserved.
Subscriptions: One year (6 issues) $15.95. Two years (12 issues) $27.95. Canada/Foreign: add $2.00/year, U.S. funds. Single copy: $3.95.
Second Class Postage Paid at Des Moines, IA and at additional offices.
Postmaster: Send change of address to *Woodsmith*, Box 10718, Des Moines, IA 50350.
Subscription Questions? Call 800-333-5075 8:00 am to 5:00 pm, Central Time, weekdays.

EDITOR'S COLUMN

Sawdust

How do you get a piece of wood to bend in a gentle, graceful curve?

It's a task that doesn't seem natural. Yet it's a lot easier than it looks — and a whole lot messier, too.

One of the most popular projects that involves bent wood is a hall tree for hats and coats. The great thing about a hall tree (at least from a woodworker's point of view) is that it's a progressive lesson in how to make bent wood laminations.

The legs are a simple L-bend. The coat hooks get a little more complicated with S-bends. Then to hold the S-hooks to the post, you have to make a complete circle, a ring. And to make the ring a little more of a challenge, it's round in cross-section (a rod-shaped piece forming a ring).

The basic process for making bent laminations is simple: rip thin strips of wood, and glue them together in a form. There are a lot of clamps, glue is oozing out everywhere, and, in a word, it's a mess. But when the glue dries, you've got a beautiful bent lamination.

Of course, there a few details thrown in there. The first one is how to rip thin, consistent strips of wood. Of all the problems, this one appears to be the easiest, yet I've found it the most perplexing to solve.

I've tried a lot of methods to rip strips of wood. It's one of the most basic tasks in woodworking. Ripping *one* thin strip is not too bad. But ripping lots of thin strips, all *consistently* the same thickness is not as easy as it seems.

The method I like best involves a very simple addition to your table saw. The addition is a shop-made insert plate with a splitter (see page 7). The splitter is just a little piece of wood that sticks up from the plate, but it makes a big difference in the accuracy and consistency of rip cuts. It's worth trying.

Now back to the hall tree. Although it's not a complicated project, it does take a lot of time. Bending the four S-hooks, for example, takes place on one form. You have to allow time for the glue to dry on one piece before you can move to the next piece.

Even if you don't want to build the hall tree, there's a great deal of satisfaction in making one S-hook — even if it's just to hang up your shop apron.

CLAMPS. There are two clamping devices in this issue that are easy to miss, but are well worth investigating.

On page 28, we're showing a stop block for a radial arm saw. This stop is actually a clamp that attaches to a fence. It's simple, but it works great. Even if you don't have a radial arm saw, you'll find a dozen uses for this stop/clamp on other tools.

The other clamping device is equally simple. It's shown on page 27 as part of the miter jig for a radial arm saw. Again, it would be easy to miss, but take a look at it. All it is is a piece of wood with a kerf in it and a machine screw — no complicated mechanics. But it works great. With just a little imagination, this clamp can be put to use all over the shop.

NEW FACES. One of the comments I hear frequently about *Woodsmith* is, "I don't know how you guys do it without advertising, but keep up the good work . . . and don't clutter it up with ads."

The key to making the whole thing work without advertising involves the business side of publishing — circulation management. The job of a circulation director is to bring in new subscriptions (usually by sending out direct mail packages), and letting current subscribers know when their subscription is about to end (by sending out renewal notices).

Even for a small publication like *Woodsmith*, this involves mailing out millions of pieces of mail each year.

At least, that's the simple explanation. There is an incredible amount of detail, and what they like to call "number crunching." The whole thing depends a great deal on computers — and we all know how screwed up things can get with computers.

To handle all of this, and keep us growing at the same time, we are fortunate to have a very talented person join us as circulation director, Liz Bredeson.

Liz was formerly circulation director for *Family Handyman* magazine (a 1.3 million circulation magazine), and *American Health*, both owned by Reader's Digest in New York.

Liz was anxious to get back to the midwest, and liked the challenge of working for a magazine that was entirely dependent on circulation. For my part, I'm delighted to work with someone with Liz's talent.

NEXT ISSUE. The next issue of *Woodsmith*, No. 73, will be mailed during the week of January 22, 1991.

Don

A LOOK INSIDE

Contents

Tips & Techniques 4 *A New Tips Contest and five great tips from fellow woodworkers: 1) Adjustable Roller Stand. 2) Router Table Push Block. 3) Improved Tenon Cutting Jig. 4) A Chip Slinger. 5) Sandpaper Files.*

Bent Lamination 6 *We answer lots of questions on bending thin strips of wood. Everything from "how thick" to "how much".*

Hall Tree 10 *A traditional favorite, this solid walnut Hall Tree features four distinctive bent wood S-hooks. Besides the S-hooks, the legs and the wooden ring provide different bending challenges.*

Laminated Ring 16 *Making a laminated ring is not as difficult as it sounds. And the same technique could even be used to make your own wooden wheels.*

Shop Notes 18 *1) Rub Arm. 2) Sanding Drum Problems. 3) Router Base Plate for Cutting Circles. 4) Wood Plugs.*

Fern Stand 20 *The bent wood legs of this graceful Fern Stand are accented by a walnut strip sandwiched between oak strips.*

Talking Shop 24 *We discuss the difference between flatsawn and quartersawn lumber. Plus, we look at calipers and talk about clamping time.*

Tools & Techniques 26 *Radial Arm Saw: A New Table Top, A Fence Support Ledge, A Miter Jig, And A Safety Handle.*

Fence & Stop Block 28 *A shop-made adjustable stop block and a new wood fence put the finishing touches on our radial arm saw.*

Sources 31 *Hardware and project supplies needed for the projects in this issue.*

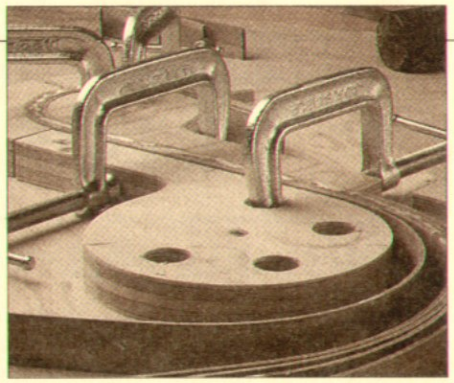

Bent Lamination *page 6*

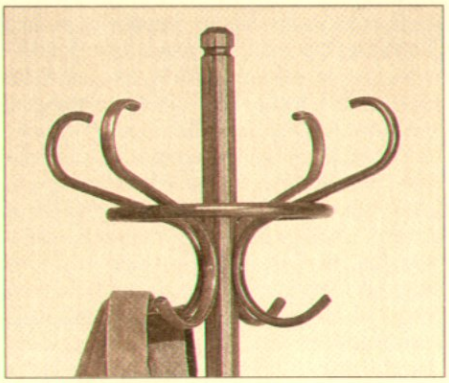

Hall Tree *page 10*

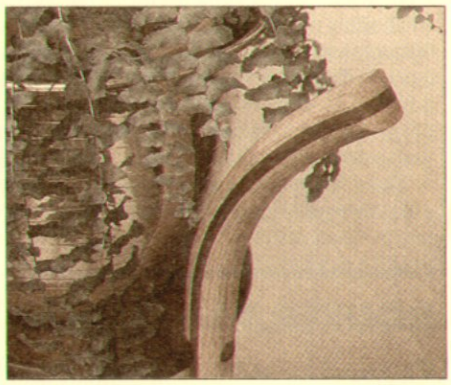

Fern Stand *page 20*

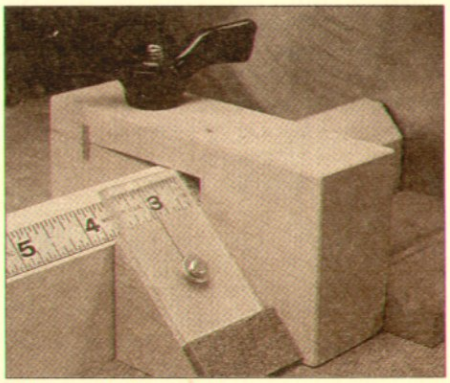

Fence & Stop Block *page 28*

Tips & Techniques

ADJUSTABLE ROLLER STAND

■ I made the roller stand featured in *Woodsmith* No. 70 easier to adjust by adding a height adjustment system that works like an elevator.

The basic idea behind the system is that a rope fastened to the bottom of the inner sleeve winds up on a dowel suspended between the two sides of the pedestal, see Fig. 1. As the dowel is turned, the inner sleeve slowly rises within the pedestal. Then, once in position, it can be locked down with the wing nut.

To add the system to my roller stand, I started by removing the roller assembly and the inner cap from the top of the stand. Next, I drilled ¾" holes in both sides of the pedestal 3½" down from the top edge and centered on its width.

To allow the inner sleeve to go up and down within the pedestal, cut a ⅞"-wide by 7"-long slot in both sides of the inner sleeve. Align the slot with the ¾" holes in the side of the pedestal.

Then, to provide a place to secure the rope, I glued a ¾"-thick by 2"-wide plywood anchor across the bottom of the inner sleeve. After gluing it in position, drill a hole to accept the rope.

Now put the inner sleeve back inside the pedestal. The rope winds up around a ¾"-diameter dowel. Cut the dowel 10" long and slide it through the holes in the pedestal.

To hold the dowel in position, I pinned it. To do this, drill ¼" holes through the dowel on both sides of the pedestal and insert short ¼" dowels. Also drill a hole through the dowel to attach the rope inside the pedestal. I also added a handle made from a piece of scrap stock and a short length of dowel, see Fig. 1.

Finally, a four foot length of rope with a knot on one end can be threaded through the hole in the dowel and the hole in the anchor plate. Then tie it off on the bottom of the anchor plate.

Now, as you turn the dowel, the inner sleeve will easily move for small height adjustments.

Joseph Porto
Evergreen Park, Illinois

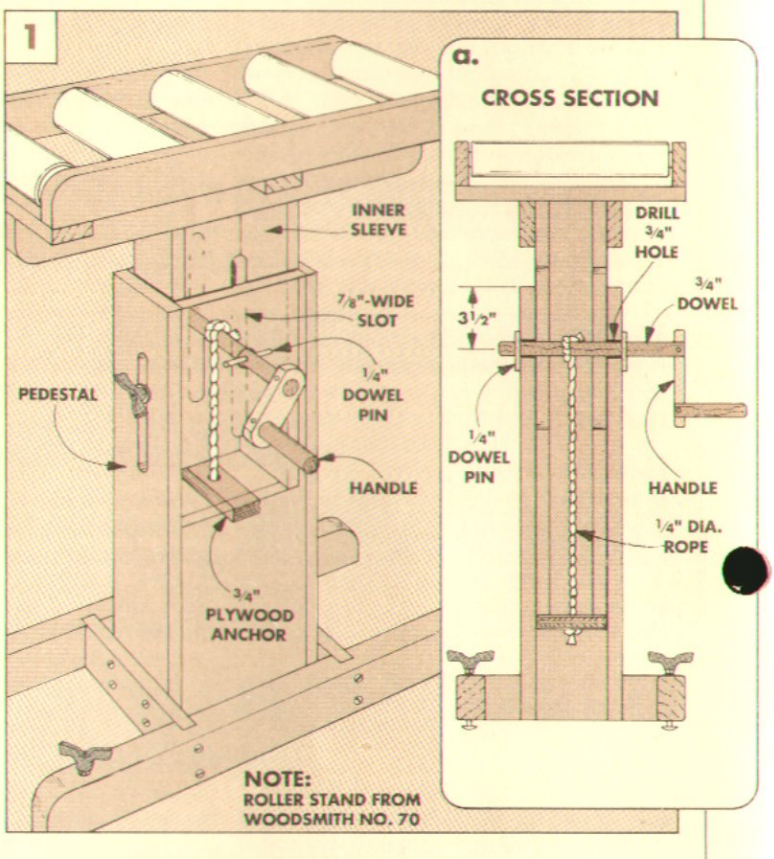

ROUTER TABLE PUSH BLOCK

■ I wanted to rout the ends of long narrow pieces of wood on my router table, but the problem was holding them square against the fence. To solve the problem, I made a special push block, refer to Fig. 2.

To make this push block, start by cutting a piece of ¾" plywood 8" wide and 12" long, see Fig. 1.

Next, to allow me to hold a workpiece firmly against the front edge of the push block, I cut out a hand-hold, see Fig. 1.

Then, for more control, I made the front edge of the push block thicker. To do this, screw a 1½"-wide by 8"-long strip of ¾" plywood flush with the front edge of the block. (This piece can be removed when routing thin stock.)

Next, attach a push handle cut from a piece of ¾"-diameter dowel. Position the dowel 3" in from the back edge of the push block, see Fig. 1.

Finally, to help keep the stock from slipping, glue a strip of sandpaper along the front edge of the push block.

Jim Ruddell
Lovettsville, Virginia

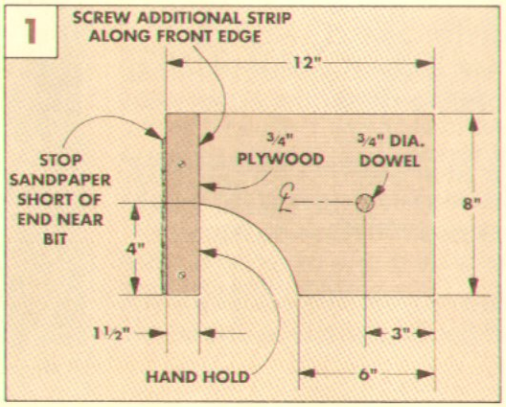

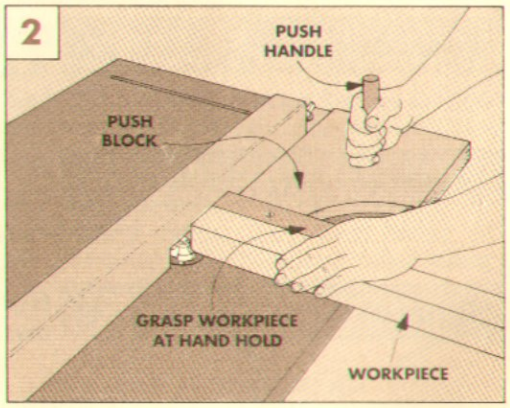

SHOP TIPS CONTEST

Many *Woodsmith* readers have great solutions to problems they've run into while working in their shop. We'd like you to share those tips with other readers. So for the next few issues, we'll ask for tips on solving different shop problems.

Up to three of the best tips in each category will be awarded a *Woodsmith* Master Try Square. Duplicate or very similar tips will be considered in the order we receive them.

CLAMP ORGANIZERS

This time, we're looking for tips on how to organize clamps. Clamps come in all different shapes and sizes, and storing them takes up a lot of space. So if you have a special way to keep your clamps organized, tell us about it.

We'll publish the best tips in the April 1991 issue of *Woodsmith* (No. 74). Send your tips (postmarked no later than January 7, 1991) to Shop Tips Contest, *Woodsmith*, 2200 Grand Ave., Des Moines, Iowa 50312. We'll continue to publish other Tips and Techniques, too, and pay upon publication $15 to $100 for these tips based on the published length.

IMPROVED TENON CUTTING JIG

■ I wanted a stable jig for cutting tenons and half lap joints on my table saw. But the jigs I've seen tend to drag as they slide along the rip fence.

So I came up with a jig that's stable *and* glides easily along my metal rip fence, see Fig. 1. The stability comes from widening the jig with a 1½" x 1½" spacer attached to the inside face.

Then to reduce drag, I used ⅞" round plastic furniture "feet" or glides where the jig touches the rip fence, see Fig. 1a. These feet are normally nailed into the bottom of furniture legs to help heavy furniture slide over carpeting. But they also help my jig glide along the fence.

When building the jig, I ripped the spacer a bit wider than necessary so I could get an exact fit later. Then, I nailed the glides into place on both the spacer and the inside of the jig where it touches the rip fence.

During assembly, I installed the spacer 1/32" above the bottom edge of the jig, see Fig. 1a. This way it won't drag on the saw table as it's being used.

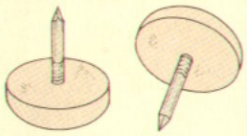

Once the jig is assembled, the fit on the rip fence may be too tight. To make it fit, unscrew the spacer and plane a small amount of wood off the side of the spacer opposite the glides. Then screw the spacer in place and try the fit again. Continue this procedure until you get a perfect fit.

I maintain this perfect fit during all seasons by planing more stock off the spacer when it expands in humid weather. When the weather dries out and the spacer contracts, I add a shim between the spacer and the side of the jig.

Note: If you have a wide fence like a Biesemeyer, Unifence or Vega system, you could use this tenon cutting jig on your table saw, too. Since your jig will bridge a wide fence, the spacer doesn't need to be 1½"-wide. Just make it wide enough to accommodate the nails on the back of the glides, plus ¼" extra so you can plane it for a perfect fit.

Marty Robinson
Gresham, Oregon

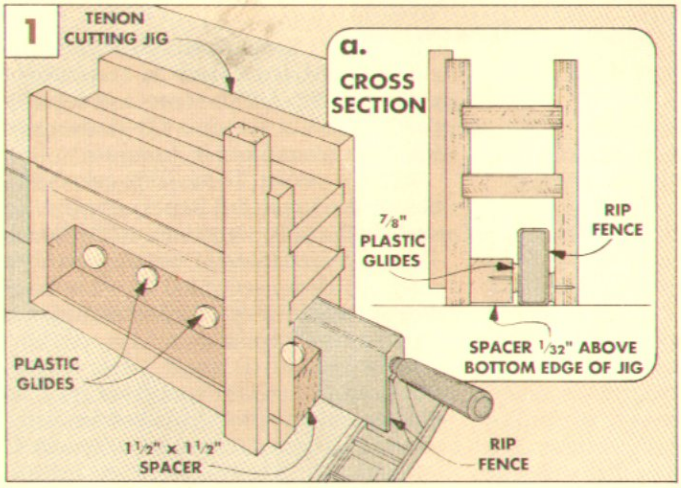

CHIP SLINGER

■ Chips and dust fell down into the motor when my router was mounted in my router table. So I came up with the idea of a chip slinger to protect the motor.

A chip slinger is a ¼"-thick plywood disk that fits on the router bit shaft, see Fig. 1. (Note: For short shank bits use a plastic cut-out from a coffee can lid.) The spinning disk slings away anything that falls through the hole in the table.

I made my chip slinger slightly larger than the hole in the router table so it protects the motor even when the router is shut off, see Fig. 1a.

C. L. Ketterer
Zelienople, Pennsylvania

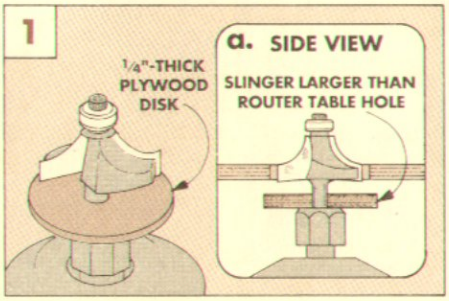

SANDPAPER FILES

■ I use sandpaper files in my shop for everything from delicate sanding jobs to sharpening pencils. To make the files, I use the Stikit paper normally used on my palm sander, see Fig. 1. Stikit paper has adhesive on the back and comes in rolls.

First, I make a handle out of ¼" plywood. Then, press the wood handle onto the adhesive on the back of the Stikit paper and cut along the edge of the handle with a knife.

You can make one with regular sandpaper, too. Apply sanding disk cement to the handle and then cut the sandpaper to fit.

William C. Elmore
Media, Pennsylvania

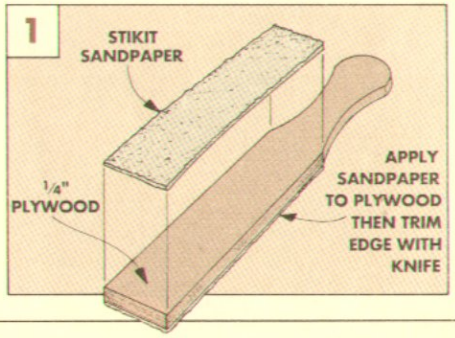

Bent Lamination

Bent Lamination is a process of bending thin strips of wood — using lots of glue and lots of clamps. It's messy, but rewarding to see a gracefully bent piece of wood emerge from a glue-encrusted form.

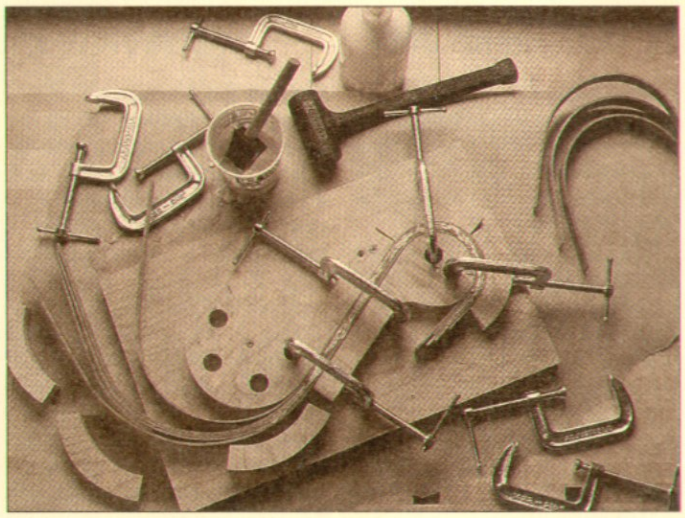

The process starts with ripping some thin strips of wood and applying glue to each strip. Then it's a matter of stacking all the strips together like a sandwich and laying the sandwich on its side in a bending jig. Then the strips are pushed around the curves on the jig, and clamped every few inches.

A CHALLENGE. The challenge is that the wood strips don't really want to bend around the form. So as you wrestle them into place the glue oozes out all over. And the strips not only slide forward and back against themselves, they also want to slide up and down.

The payoff comes when you remove the clamps and start scraping off the dried glue. The sloppy mess becomes an attractive piece of wood — bent to the perfect shape. And the more it's cleaned, the better it looks.

STRENGTH. There's more to bent lamination than just appearance. It's strong as well as attractive. While it would be much easier to make a curved piece by simply cutting it out of solid stock with a band saw or sabre saw, it's not always a good idea. Cutting curves from blanks creates a lot of waste. And there will be a weak spot where the grain runs across the narrow face (from edge to edge), see Fig. 1.

For example, if you cut a piece of solid oak into a "U" shape, you can easily break it in two. If the grain runs vertically in the "U", it will break at the bottom. If it runs horizontally, it will break on the sides.

If you laminate thin strips of oak into the same shape, it's very difficult to break because the grain of each piece runs *around* the bottom of the "U".

QUESTIONS. Okay, this sounds interesting, but like any woodworking technique, some questions come with the process.

QUESTION: *I'm not sure what kind of wood to use for my bent lamination project. What should I look for?*

Any wood will bend if it's cut thin enough. But some woods bend easier to tight curves without breaking. Among the commonly available hardwoods, oak, walnut, mahogany, and ash bend the best. Hardwoods usually bend better than softwoods, but redwood, yellow pine, and cedar can be used in bending projects.

STRAIGHT GRAIN. Whatever kind of wood is used, remember that wood with grain that runs in a fairly straight line is best for bending around tight curves. Highly figured wood, or woods like maple and birch which have unpredictable grain patterns, often break before they bend, see Fig. 2. (For more on wood grain, see page 24.)

QUESTION: *What is the best way to cut all those thin strips?*

To cut strips to a consistent thickness, and do it safely, I cut them on the table saw using a special shop-made insert with a splitter, see opposite page. This insert is made so there's no room on either side of the blade for the strips to fall into the slot.

RIPPING. To rip the strips, set the fence so the distance between the fence and the blade equals the desired thickness. Using a push block, cut as many strips as you'll need plus several extras. (Some may break while being bent.)

Shop Note: Often when ripping a board, it's difficult to keep it tight against the fence. This causes a variation in the thickness of the piece. Check the piece with a square and joint it, if necessary.

KEEP IN ORDER. To minimize color variation in the laminated pieces, arrange the strips in the order they're cut off the board. This makes it difficult to spot the joint lines when the pieces are glued up. Sometimes they will match so well, the lamination looks like a piece of solid stock.

RIP FOR STRAIGHT GRAIN. When ripping, the goal is to keep the straightest grain on the *edge* of the strip to help prevent breakage when bending. So if the straightest grain is on the face of the board, just rip the strips to the appropriate thickness, see Fig. 2.

However, if the straightest grain is on the edge of the board, cutting the strips is a two step process. First, rip a piece to the width of the finished strips (plus 1/16" to allow for clean-up and shaping). Then turn that piece on its edge and resaw the strips with the straight grain up, see Fig. 3. This way, the straightest grain will appear on the edge of the strips.

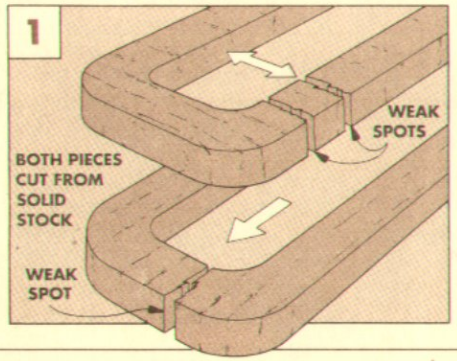

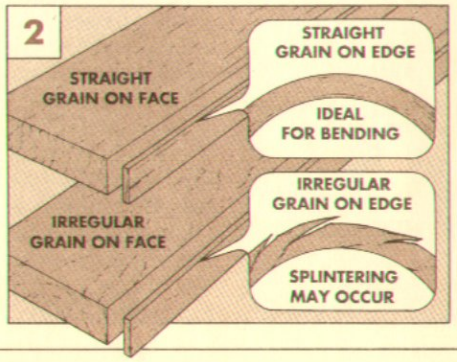

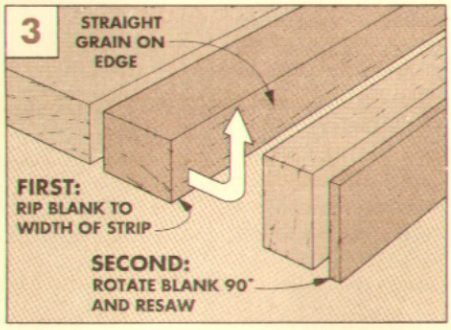

QUESTION: *How thick should the strips be? Can I use really thin strips — even veneer?*

You can use very thin strips, but there are some problems. First, it can be difficult to rip very thin pieces to a consistent thickness. And, there's a lot of waste created by all the saw kerfs. Finally, it's more awkward to glue and then wrestle a large number of really thin strips around a form than a small number of slightly thicker ones.

I use the thickest strip that will bend around the smallest radius in the jig. It's often a trial and error approach. While building the Fern Stand on page 20, I tried to bend an 1/8"-thick strip of walnut for a leg, and it broke. Yet a 3/32"-thick strip, just 1/32" of an inch less, bent just fine. 1/32" may not seem like much, but when the strip is only 1/8" to begin with, 1/32" is 25% of its thickness.

QUESTION: *Thin strips are hard to measure accurately. How do you know if they're the right thickness?*

Here's a tip. Measure a stack of them, rather than one at a time. For instance, eight 3/32"-thick strips should equal 3/4". Before ripping your wood to finished thickness, rip some strips out of scrap stock and measure the thickness of the stack.

I also use dial calipers to accurately measure the thickness of strips. For more on dial calipers, see Talking Shop, page 25.

QUESTION: *What if the strips won't bend around the form without breaking?*

When I don't want to make a strip any thinner, and it still won't bend without breaking, I take advantage of the fact that moist wood bends better than dry wood. Soak the strips in tap water in the kitchen sink. (If they won't fit in the sink, use the bathtub.)

Soaking time varies with the wood and thickness. So check the strips every ten minutes or so to see how flexible they are. Take a strip out of the water and gently try to bend it around the tighest curve on the jig. If it won't bend around the form, put it back in the water and wait a while longer. The 3/32"-thick walnut strips for the Hall Tree hooks were ready to bend after soaking 20 minutes in room temperature water.

WET BENDING. When the wood strips are flexible enough, take them out of the sink, shake off the excess water, and put them in the jig *without glue*. Bend them slowly and carefully. Once they're in position, put the clamps on, and let them dry.

If possible, I like to let the strips dry overnight. It's important that the strips be dry when they're glued up. If they're still wet, the moisture will decrease the holding power of the glue and the workpiece may delaminate.

RIPPING THIN STRIPS

One key to a successful bent lamination project is using wood strips that have square edges and are uniform in thickness. The easiest and safest way I've found to cut them is on a table saw with a "zero clearance" insert with a splitter, and a simple push block.

INSERT

The insert on my table saw has so little clearance on each side of the blade that the thin strips can't fall down into the blade slot. The splitter keeps the kerf open the same width as the blade so it reduces kickback and binding on the back edge of the blade.

SHAPING THE BLANK. To make this insert, first resaw or plane a hardwood blank to the thickness of the insert opening in the saw table so the new insert will lie flush.

Now remove the original insert from your saw and trace the outline of the insert onto the blank. Then rough cut to within 1/16" of the outline, see Fig. 1.

To trim the new insert to the exact shape of the original, I use the original as a template. Start by taping the original insert to the new insert blank with double-sided carpet tape. Then mount a flush trim bit in the router table and, with the bearing riding on the original insert, trim the new one to shape, see Fig. 1a. (If you don't have a flush trim bit, you can sand or file the insert until it fits snugly in the opening.)

The next step is to cut the blade slot. To do this, replace the original insert in the saw table. Next, carefully align the fence with the edge of the original insert, see Fig. 2. Then rip the slot, stopping and turning off the saw 3" from the end of the new insert.

THE SPLITTER. To make the splitter, rip a piece of stock to the exact thickness of the saw blade kerf. Then cut it 1" high (wide) and 3" long. Sand the end that will be closest to the blade to a point, and then glue the splitter into the slot, see Fig. 3.

Finally, bore a 1"-diameter hole in the insert to make it easier to lift out of the table.

PUSH BLOCK

Of all the push blocks in the *Woodsmith* shop, the one that works best for ripping thin strips is extremely simple. It straddles the saw blade so the heel on the bottom edge of the block pushes *both* the workpiece and the waste past the blade, see Fig. 4.

The push block is made from an 11"-long piece of 2x4. To provide a lip to push the stock, cut or glue a 1/4" heel on the bottom edge of the block.

By adding a heel to the top of the block, you can turn the block over and use the other side when the first heel gets torn up by the saw blade.

SHOULD YOU SAND?

After ripping the strips to thickness, you might be tempted to sand the strips before you glue them up. Don't. The saw will cut the strips so the edges are square and the thickness is uniform. Sanding may round the edges and create depressions in the thickness of the strips.

But what if there are blade marks in the face of the strips? Using a combination blade instead of a ripping blade will eliminate many of the saw marks. Or, if you have a thickness planer that will plane thin stock, rip the strips slightly thicker and then run them through the planer.

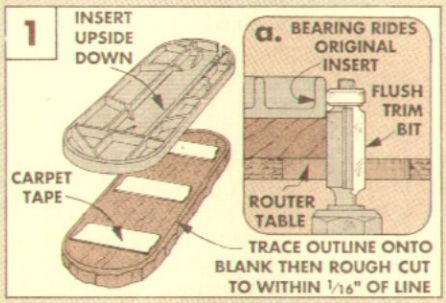

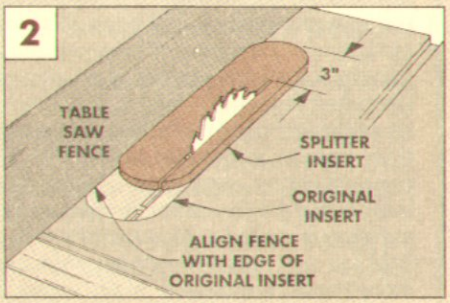

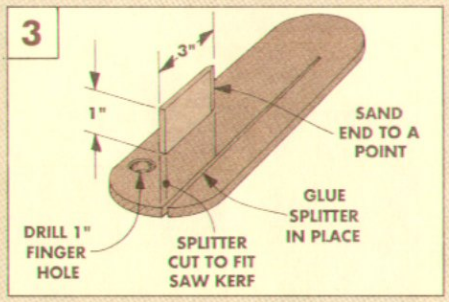

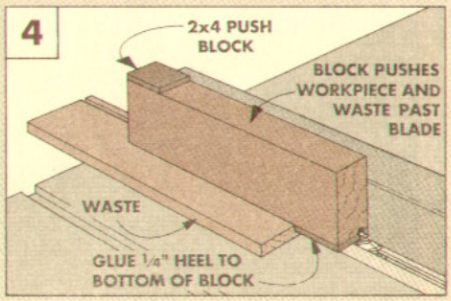

QUESTION: *Do I need a lot of clamps or special tools to make a bent lamination?*

Let's start with the tools. You'll need only a table saw to cut the thin strips. (The blade must be square to the table and in line with the fence.) I get a smooth enough cut with a combination blade that the strips don't have to be planed afterwards. The only specialized tool in the process is a bending jig — and that's made in the shop.

As for the clamps, it depends on how complex or large the project is. The most clamps you'll need at any one time for the projects in this issue is twelve (for the Hall Tree ring), and they can be a combination of C-clamps and small bar clamps.

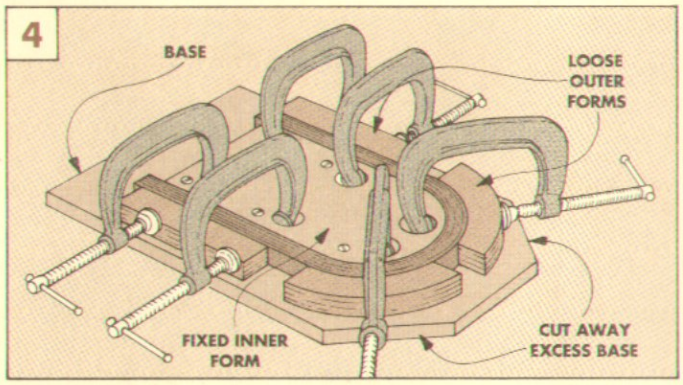

QUESTION: *I don't have that many clamps. Are there any alternatives to using C-clamps and bar clamps?*

Several, but I found that C-clamps are the easiest and most versatile way to do lamination. So if you don't have enough, try to borrow some from a friend.

STRAPS. An alternative to using C-clamps is to use metal straps. A strap applies even pressure all around the curve and helps prevent the strips from splitting along the outside face, see Fig. 5. Straps can be made from pieces of metal plumber's strap or thin dimension metal bar stock. Both are available at hardware stores.

One end of a strap is fixed to the base. Then it bends around a curve and is pulled up tight on the other end. A bolt goes through the free end of the strap and then through a fixed block. The strap gets pulled up tight with a wing nut or a wrench.

CAMS. Cams are another good, inexpensive alternative to C-clamps. They can be nicely designed and carefully constructed or they can be a piece of wood with one rounded corner, see Fig. 6. The important thing is that the pivot point be offset so more pressure is applied as the cam is turned.

If you use cams, remember they exert more pressure than you might expect. So use them with a block or a pad to keep from marring the workpiece, see Fig. 6.

WEDGES. In some cases I'll use a wedge in place of a clamp, see Fig. 7. There isn't always enough room to use wedges, since they require another block on the jig to "wedge" against. But they're another strong way to hold the strips in place.

QUESTION: *How are the bending jigs made? What materials do they require?*

I used A-C (interior grade) plywood to build the jigs shown in this issue. Since the grain switches direction from layer to layer, plywood is equally strong in all directions. A lot of clamping pressure can be put on a plywood form without breaking it.

You could use a lower grade plywood (such as CDX), but watch out for voids. They can weaken the form or create a rough edge where the form contacts the laminated strips. Particleboard also works well, though it's more likely to break under pressure than the plywood.

BASE. To make a bending jig, start by cutting a base. Just make it big enough to support the bending pieces and the strips. If the base is too big, you'll wind up tightening all the C-clamps with half-turns since the base gets in the way of the C-clamp handles. This seems like a small point, but when you're bending all those glued up strips around the forms, you want the clamps to go on quickly.

FORMS. The forms are the parts of the jig that the wood strips are bent around, see Fig. 4. There are two parts to the forms, the inner forms and the outer forms.

The inner forms are usually attached to the base, and the strips wrapped around them. The outer forms are not attached. They hold the strips against the inner forms and distribute the pressure of the clamps.

To make the forms, lay out the shapes on the plywood, or glue a pattern onto the plywood with spray adhesive or rubber cement. Then cut the plywood with a band saw or sabre saw. I like to cut to within 1/16" of the pencil line, and then sand to the line with a disk or drum sander. This way, I make sure the surfaces that touch the strips are smooth.

ASSEMBLY. When all the pieces are cut, lay them out in position on the base. Check that the clamps are big enough to bridge across the inner forms, the thickness of the strips, and the outer forms. If they aren't, downsize the forms or use larger clamps. Then, screw the inner forms to the base.

Finally, do a "dry run" to test the jig. Start by gently bending dry strips into the form. Then put on the clamps and check for gaps. Sand down any high spots so there are no gaps between forms and the strips.

QUESTION: *Won't the glue stick to the jig's base and forms?*

To keep the glue from sticking, rub on a heavy coat of paraffin or paste wax. I repeat this waxing step between each use.

Rub the paraffin or wax on all surfaces that will be in contact with the workpiece. To get a smooth coat of paraffin, I use a hair dryer to melt it into the form. This step isn't essential, but it helps the paraffin penetrate the plywood and eliminates any chance of the glue sticking to the jig.

Note: There's one time I wouldn't recommend waxing the form. If you're not going to sand or clean up the faces of your finished lamination after gluing, don't use wax on the form. Paste wax and paraffin will prevent the finish from penetrating the wood on the finished lamination. In this situation, I use waxed paper to line the form.

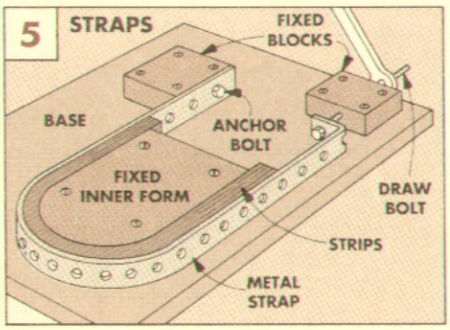

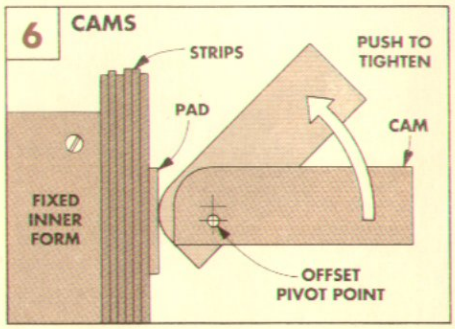

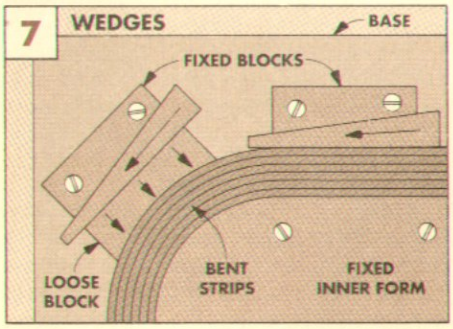

QUESTION: *Will the wood try to spring back to its original shape after gluing?*

Yes, a little. If you find that there's too much spring back in a laminated piece, reshape the forms by tightening the curves enough to make up for the spring back. There's no formula for how much to reshape the forms, it just takes some experimentation. (Note: Small laminated projects will normally have very little spring back.)

QUESTION: *What kind of glue should I use? How do you glue-up the strips?*

I used Titebond Wood Glue (a yellow glue) for the projects in this issue. Other yellow (aliphatic) glues will also work since they fill small gaps to some extent and dry quickly.

If the project has a lot of strips and you're concerned that yellow glue won't provide enough working time, use white glue. White glue takes longer to set-up, so you won't feel quite as rushed.

For a project that will be outdoors, I use a resorcinol glue or epoxy. They're waterproof and will stand up to the weather. However, epoxies differ in how well they fill gaps and how much working time they provide. You'll have to experiment to determine what you need.

Bent lamination uses lots of glue. It's hard to predict just how much you'll need, but it is usually more than you expect. The legs for the Fern Stand, for example, took more than half a 12 oz. bottle. So make sure you have plenty of glue before you start.

APPLYING THE GLUE. To apply the glue, I use an inexpensive foam brush and trim the tip to the width of the strips. The foam brush can be washed out after each use, but it deteriorates rapidly, so have several on hand.

Pour the glue into a small cup or dish, and spread it on only one side of each strip, see Fig. 8. As you brush the glue onto the strips, stack them like you're making a sandwich. Then pick up the stack and lay it on its side in the form.

QUESTION: *What's the best procedure for clamping the strips?*

Start clamping in the middle, and then move out toward each end wrapping the strips around the curves. At first, just put enough clamp pressure on the strips to keep them from moving. Tightening comes later.

When you start bending the glued-up strips around the curves, things can get a little tense and rushed, so it's a good idea to have a friend near by to supply a "third hand."

Here's an example of how tight a thin, straight grained strip of wood can be bent. This 3/32"-thick walnut strip was soaked overnight in tap water and then tied up like a pretzel.

Some of the strips will slide up above the rest as you bend the stack around the curves. To keep the edges flush, use a hammer to tap them down, see Fig. 9. And to close any gaps, re-adjust the position of a clamp or add another one.

When I'm sure that all the strips are in contact with each other, I re-tighten all the clamps and even out the pressure.

CLEAN-UP. Before the glue starts to set up, use a dry paper towel or small piece of wood to wipe off a lot of the glue that has oozed out. It's easier to remove the glue now than later, and removing the excess may shorten drying time by exposing the edges of the strips. Don't use a wet towel though. You don't want to add any moisture to the strips.

QUESTION: *How long does it take for the glue to dry?*

This process is very different from gluing up a panel. When gluing up a panel, I take the clamps off in 10 to 30 minutes. But when laminating strips, there's lots of glue and not much wood to soak up the moisture.

Once the strips are in the bending jig, the moisture in the glue can't escape on three sides. The base and bending forms are waxed, leaving only the exposed edge of the strips for the moisture to get out.

Tighter curves require longer drying time. The glue needs to be completely dry (not just set-up) to resist the strips' desire to spring back to their original shape. And the tighter the curve, the greater the pressure. So I leave the clamps on overnight.

When laminating a piece with more gradual curves, such as the Fern Stand legs, there is less pressure to spring back. In this case, I'll remove the clamps after six hours.

REMOVING THE CLAMPS. When I remove the clamps, I do it slowly. Watch the curves carefully, and check for delamination. A small amount of spring back is normal. But if the strips start to separate, re-tighten the clamps and wait at least a couple more hours. If things stay in place, then remove the workpiece, and start cleaning it up.

QUESTION: *What's the best way to get off all that glue?*

I use a paint scraper to get the worst of the glue off. But don't try to get down to bare wood with the scraper or you may tear off some edges.

To remove the rest of the glue I use either a low angle block plane or a sanding drum. If you use a block plane, make a fine cut to avoid tear out.

Sanding is also a good way to remove the last of the glue. For those pieces that have gradual curves and will fit on my drill press table, I feed the workpiece between a drum sander and a guide block clamped to the table, see Fig. 10.

CONCLUSION. The process is involved, but it's pretty logical, too. While it may be tricky and a little messy, it's also just plain fun.

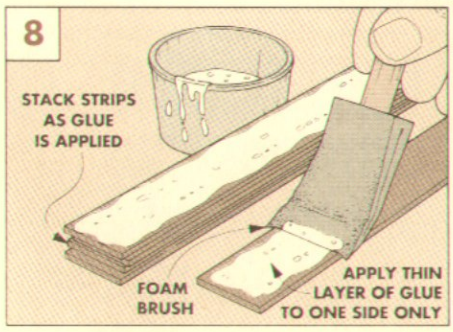

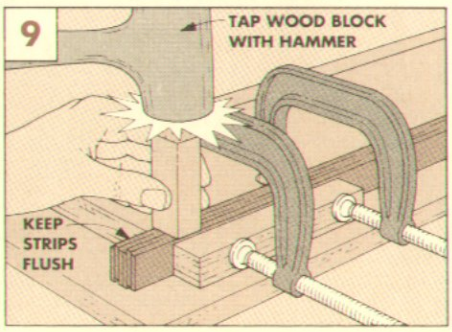

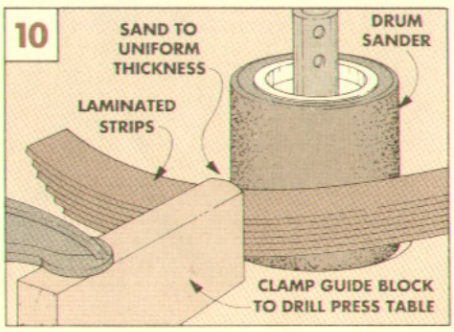

Hall Tree

This hall tree offers three different bending challenges — a simple L-bend, a more complicated S-bend, and to top it off, bending a full circle. All you need is a few shop-made jigs, and a little time.

Every time I see a piece of bentwood furniture, I have to stop and try to figure out how it was made. And whenever I think of bending wood, a classic project that I've wanted to build comes to mind — a hall tree with its distinctive curled hooks.

CONSTRUCTION. I soon found out this project requires a bit of patience to glue up the three bent parts — the legs, the S-hooks, and the ring. Each offers a different bending challenge.

The legs require a single bend and are the simplest to make. The S-shaped hooks have two bends and are more challenging. And the ring is laminated using a slightly different process than the other two. (We've included an article on bent lamination techniques on page 6 and a special article on bending rings on page 16.)

WOOD. For this project, I selected walnut because it bends well, is strong, and has a traditional elegance.

HARDWARE. Once the curved parts are made, there's not a lot of work to assemble the hall tree. The S-hooks and ring are secured to the post with brass ovalhead screws. I also used walnut plugs to cover the flathead screws in the leg holes. (*Woodsmith Project Supplies* is offering the walnut plugs and the patterns for the bending jigs, see Sources on page 31.)

FINISH. Because of the curved parts in the hall tree, I decided to use a wipe-on finish. I wiped on a couple of coats of tung oil to produce a soft luster.

MATERIALS

WOOD PARTS

A	Leg Strips (32)	3/32 x 1 1/8 - 30
B	Hook Strips (20)	3/32 x 3/4 - 30
C	Post (1)	1 1/2 x 1 1/2 - 68
D	Ring Starter Strip (1)	3/32 x 3/4 - 40
E	Ring Strips (10)	3/32 x 3/4 - 24

SUPPLIES

- 7.6 Bd. Ft. of 3/4"-thick walnut
- (8) Walnut ovalhead plugs
- (8) No. 6 x 1" brass ovalhead screws
- (8) No. 8 x 1 1/4" Fh woodscrews
- (1 pint) Tung oil

BENDING JIGS

- (1) 48" x 48" sheet of 3/4"-thick plywood
- (1) 6"-length 3/4"-dia. dowel
- (1) 3"-long 1/4" carriage bolt
- (5) No. 8 x 2" flathead woodscrews
- (6) No. 8 x 1 1/4" flathead woodscrews
- (1) can of paste wax

CUTTING DIAGRAM

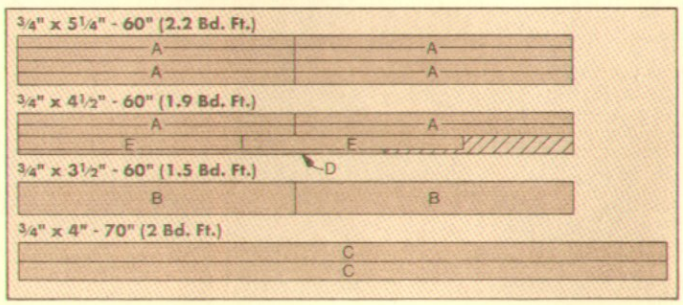

BENDING JIGS

I started work on the hall tree by building the three bending jigs. (Note: Laying out these jigs may be the most difficult part of this whole project. Although we're showing drawings for these jigs on this page, you may want to order the *full-size* patterns and detailed instructions from *Woodsmith Project Supplies*, see page 31.)

LEG BENDING JIG. The leg bending jig consists of three pieces: a base, a fixed form, and a pivoting pressure block, see Fig. 1. The fixed form is attached to the base but the pressure block pivots on a dowel. The pressure block and fixed form operate much like a hamburger press to squeeze the strips together. The ends of the fixed form also act as cut-off lines for trimming the legs to their finished length once they're glued up.

CONSTRUCTION NOTES. The fixed form and pressure block for the leg bending jig are made by gluing together a double layer of ¾" plywood. After the two pieces of plywood are glued together, the next step is to draw a full-size paper pattern of the jig shown in Fig. 1. Then glue this pattern to the plywood, and cut the pieces to *rough* shape.

Next, clamp the pieces to the base and drill ¾" holes for two dowels — one (near the end of the pressure block) acts as a pivot pin, and the other (near the inside edge of the pressure block) holds the pressure block in position until clamps can be applied.

Then, drill pilot holes and screw the fixed form to the base, see Fig. 1. After the holes are drilled, remove both pieces, sand to the pattern lines, and screw the jig together.

S-HOOK BENDING JIG. Although the S-hook jig squeezes strips together like the leg jig, it's different in a number of ways. Instead of relying on one pressure block it uses five smaller curved pressure blocks, see Fig. 2. And it uses two whistle-shaped bending forms — the larger one is fixed to the base while the smaller one acts as both a pivoting form and a pressure block.

The pivoting form swings out and allows the strips to be inserted, then pivots back so they can be tightly clamped in place.

CONSTRUCTION NOTES. The pivoting form also uses a pin like the leg jig, but this time I used a ¼" carriage bolt with the threads cut off instead of a ¾" dowel, see Fig. 2. The ¼" bolt located at the center of the pivoting form allows room to drill holes for C-clamps.

There are also two sets of marks on the bending jig — one set shows where the S-hooks will be trimmed to size, see Fig. 2. And the other set shows the screw hole positions for mounting the S-hooks.

RING BENDING JIG. The ring bending jig is completely different from the other two. It doesn't have any pivoting parts or pressure blocks. Instead, it consists of a simple ring-shaped form that's mounted onto a square base, see Fig. 3. (For more on making this jig, see page 16.)

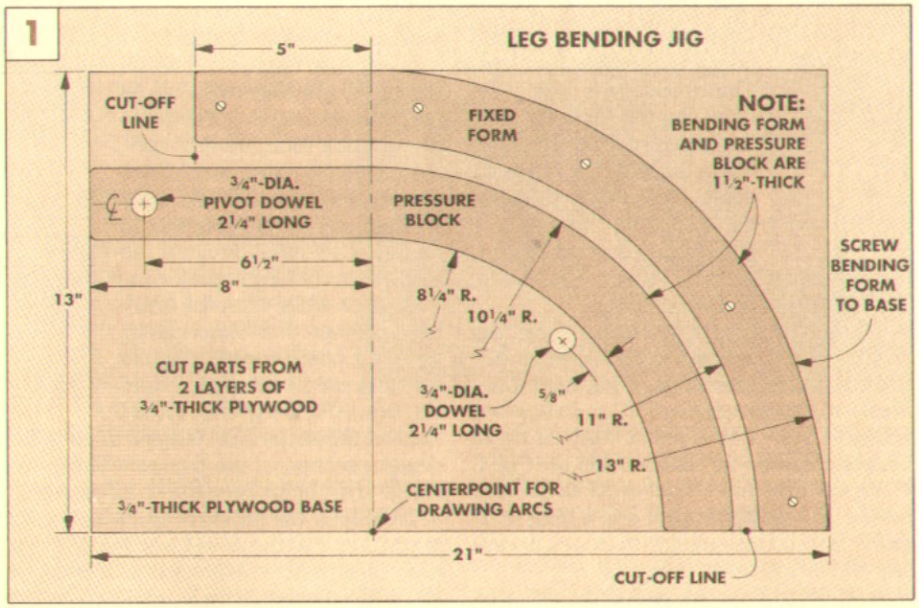

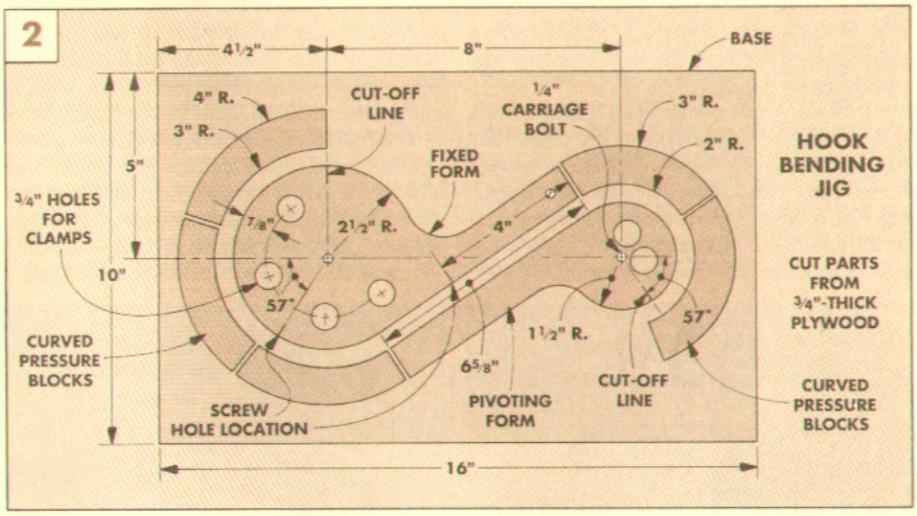

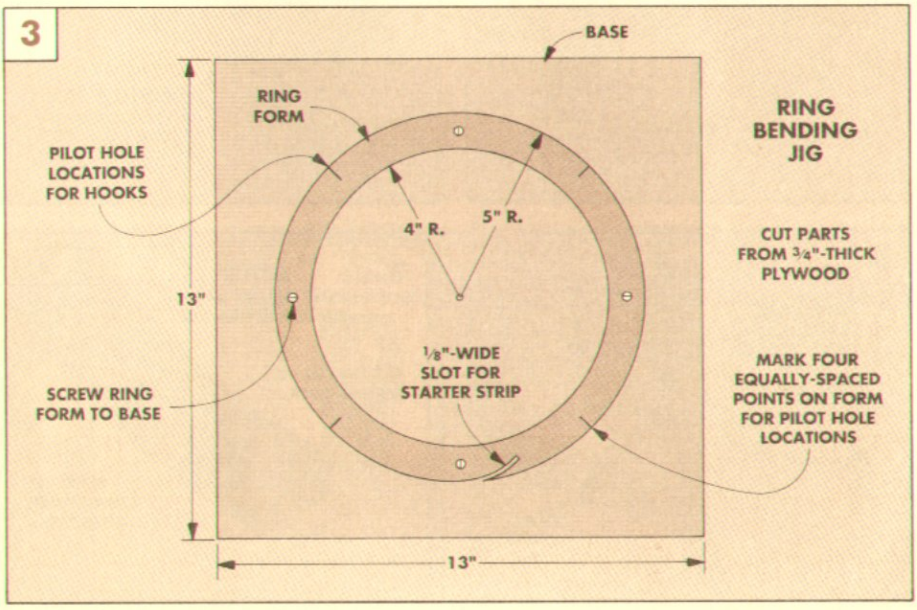

LEGS

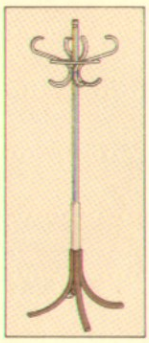

After completing the jigs, I began work on the four legs. The first step is to rip the strips for the legs. To keep the legs from bowing under heavy loads (such as winter coats), I decided to make them 1"-wide. Each leg is glued up from eight strips, each 3/32"-thick — for a total thickness of 3/4".

CUT STRIPS. The **leg strips (A)** are cut from 3/4"-thick stock in two steps. First, rip eleven blanks to a rough length of 30" and a finished width of 1 1/8". Then, resaw each of these blanks into three 3/32"-thick strips, see Fig. 4. (This will give you a total of 33 strips. You need eight strips for each leg, a total of 32 strips, but you may want to cut extra in case any of the strips twist or bend.)

TEST FITTING. Before gluing the strips together, there's one more important step — test fitting the bending jig. This involves placing the strips in the bending jig, and checking for gaps.

To check the fit, swing the pressure block out and clamp eight strips to the end of the block, see Fig. 5. Then swing the pressure block closed and insert the locking dowel, see Fig. 6. Next, clamp across the forms and mark any areas where there are gaps, see Fig. 7. If necessary, disassemble the jig, resand, and check for a tight fit.

Note: Any imperfections on the jig will translate into gaps on the laminated parts. It's better to spend extra time sanding now, than applying filler later. Once you're satisfied with the fit, apply a generous coat of paste wax to the jig. This helps prevent the strips from sticking to the forms.

GLUE UP LEGS. After the bending jig is waxed, the legs can be glued up. I used a foam brush to apply an even coat of glue onto one side of each leg strip. Then I stacked the strips and clamped them to the straight section of the pressure block, see Fig. 5. (This helps keep the strips aligned.)

Now close the pressure block and lock it in position with the dowel, see Fig. 6. Then, apply clamps across the form and pressure block about every 4" to 5", and remove the dowel, see Fig. 7.

After the leg has dried overnight, remove it from the jig. Then clean up the jig by removing any glue with a chisel. Now, use the same procedure to glue the remaining legs.

TRIM LEGS. Once all four legs are glued-up, they need to be trimmed. Before you trim them, scrape off any excess glue and hand-plane each leg to a finished width of 1". Then, if there are any variations in thickness, use a drum sander and a rub block to thickness sand the legs to a uniform 3/4", see page 18.

Next, set each leg back in the bending jig and mark the locations to trim to length. Finally, cut each leg to its finished length.

ROUND OVER EDGES. After the legs have been trimmed to length, the edges can be rounded over. I routed the top *edges* of each leg with a 3/8" round-over bit in the router table, see Fig. 8a. Then, I used a file to round over the top *ends* of the legs to a 3/8" radius, see Fig. 8a. Note: For stability, don't round over the bottom edges of the legs.

DRILL MOUNTING HOLES. The final step in making the legs is to drill two counterbored mounting holes in each leg, see Fig. 9. To do this, first drill a 1/4"-deep counterbore with a 3/8" drill bit. Then, use a 5/32" drill bit to drill the shank hole.

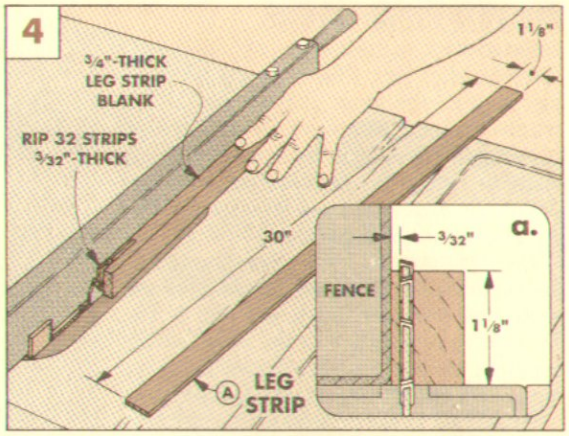

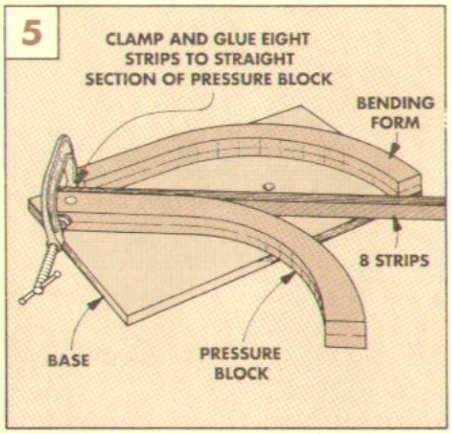

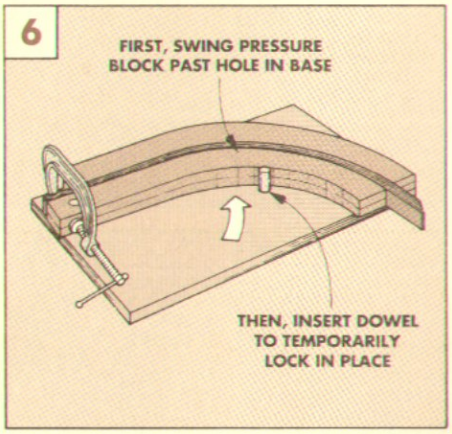

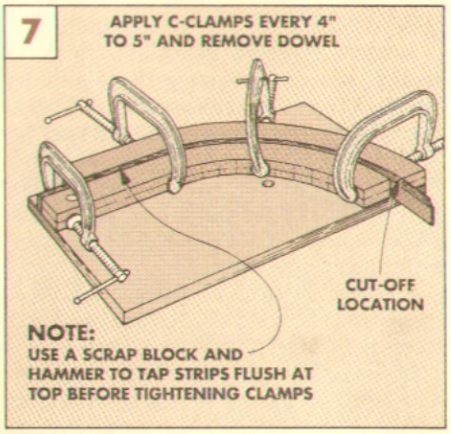

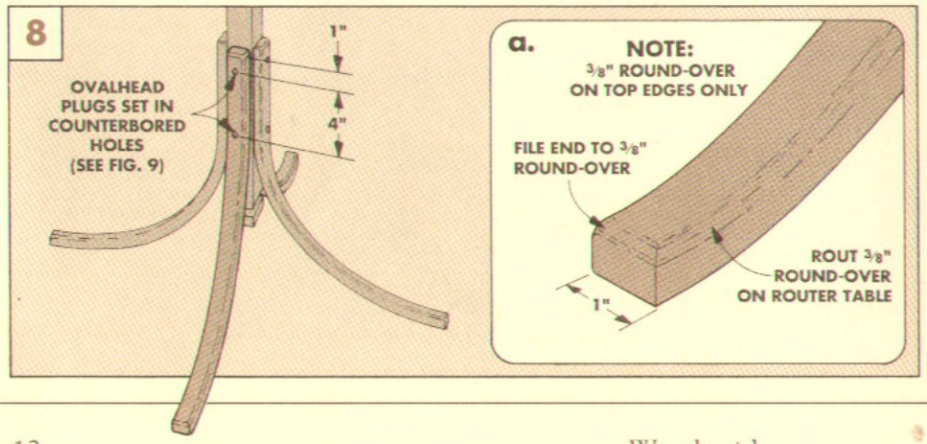

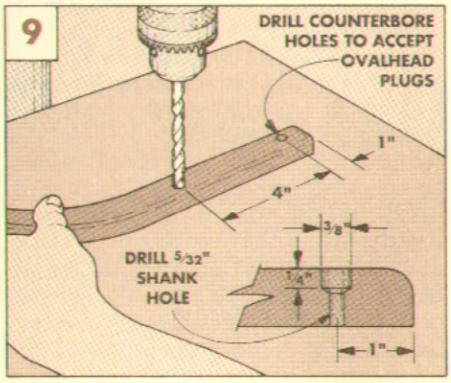

S-HOOKS

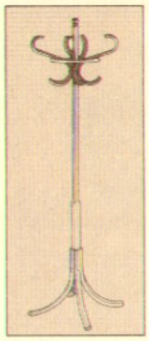

Just like the legs, the four S-hooks are made with 3/32"-thick strips, but they're only 3/4"-wide. It takes five strips laminated together to form each of the four S-hooks. With glue between the pieces, the S-hooks measure about 1/2" thick.

CUT STRIPS. To rip the **hook strips (B)** for the four S-hooks, I began by cutting two blanks to a rough width of 3" and a length of 30". Then, set the rip fence to produce 3/32"-thick strips and rip the blanks to produce twenty 3/4"-wide strips, five strips for each S-hook, see Fig. 10.

WET BEND S-HOOKS. Before the strips can be glued-up in the bending jig, I soaked them and pre-bent them to shape. This helps prevent the strips from breaking on the tight radius bends of the bending forms.

To wet bend the strips, place five strips at a time in water for about 15 minutes. Then, clamp the strips in the bending jig between the pivot arm and the fixed form, see Fig. 11. Next, working from the center out, curl the strips around one radius at a time, clamping the pressure blocks in place, see Fig. 12. (I used 2 1/2" C-clamps for this.)

Let the S-hook dry overnight. Then soak and wet bend the remaining strips in sets of five. After removing a set of strips from the bending jig, I slipped rubber bands over the bent ends of each set to prevent it from losing its bent shape as it dried.

TEST FITTING. Now that the S-hooks are pre-bent, it's time to go back and fine tune the bending jig. Clamp one set of strips into the jig and mark any gaps or rough areas on the forms. Then, take the jig apart and re-sand as necessary until a tight fit is achieved. Finally, reassemble the bending jig and apply a generous coat of paste wax to the edges of the forms, the pressure blocks, and the base.

GLUE-UP S-HOOKS. Now that the bending jig is ready, the S-hooks can be glued up. Start by applying an even coat of glue to one side of each strip. Then, stack the strips and clamp them in the form, just as when wet-bending the S-hooks. Let the glue dry overnight, remove the S-hook from the jig, and then glue-up the remaining sets of strips.

TRIM S-HOOKS. After the S-hooks are glued-up, they can be trimmed. To do this, begin by scraping off any excess glue. Then, hand plane the S-hooks to a uniform width. Next, set each S-hook back in the bending jig and mark the cut-off locations at the ends, see Fig. 12. Finally, cut the ends off each S-hook with a hand saw or a band saw.

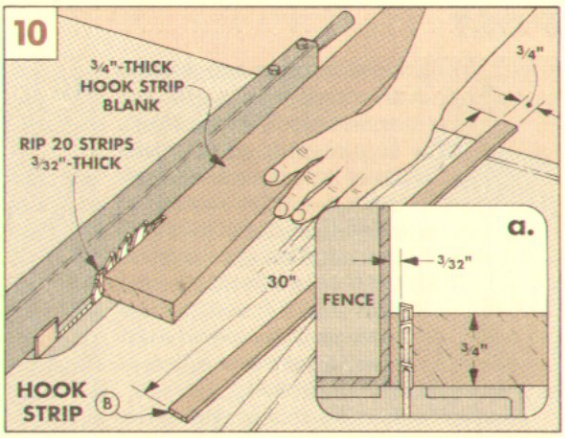

ROUND OVER EDGES. After the S-hooks are trimmed, the edges can be rounded over. I did this by mounting a 3/8" round-over bit in the router table and raising it to produce a 5/16"-deep cut, see Fig. 13. After the edges are routed, round the ends of each S-hook with a file, see Fig. 14. I used a quarter to strike a radius on the ends, see Fig. 14a.

DRILL MOUNTING HOLES. To complete the S-hooks, drill two holes: one for mounting the S-hook to the post, and one to attach the ring. To locate the holes, place the S-hooks on the bending jig and mark them, refer to Fig. 2 for the hole locations. Next, use a 5/32" drill bit to drill two shank holes in each S-hook, see Fig. 15. Finally, countersink the holes so ovalhead screws will sit flush with the surface of the S-hook, see Fig. 15a.

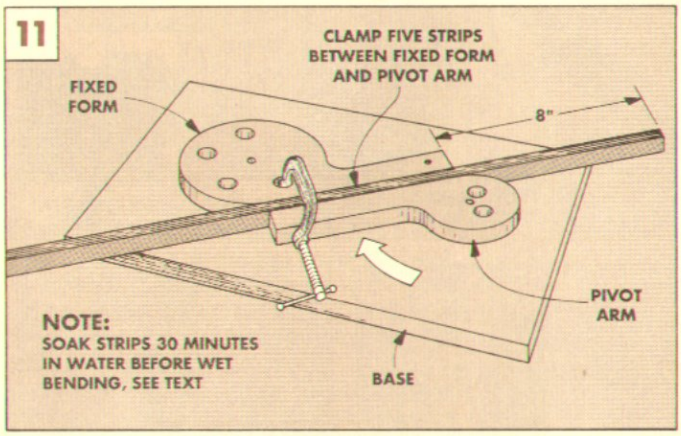

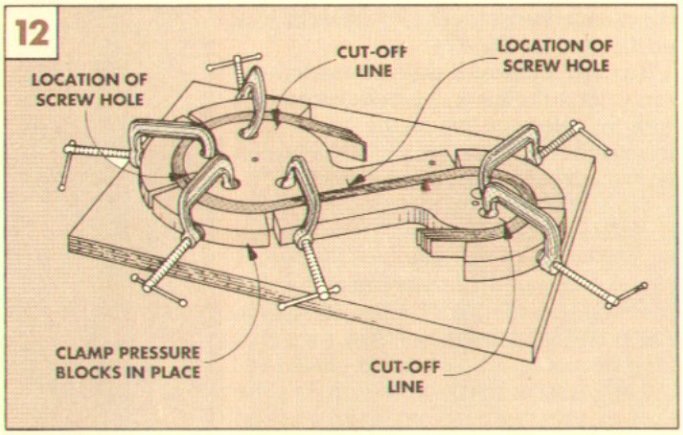

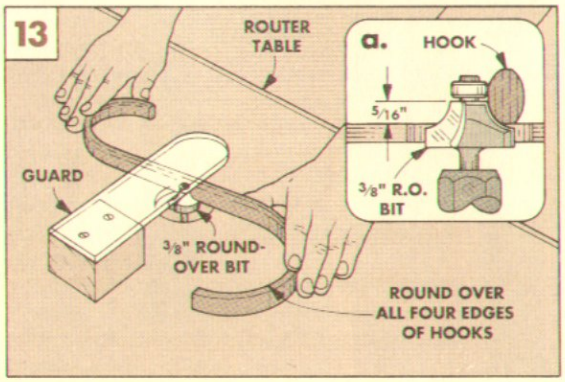

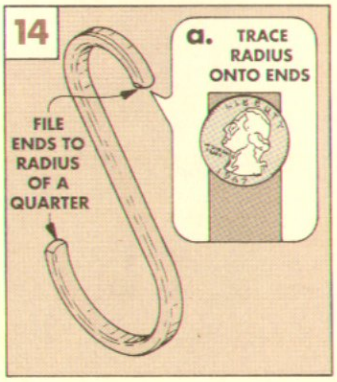

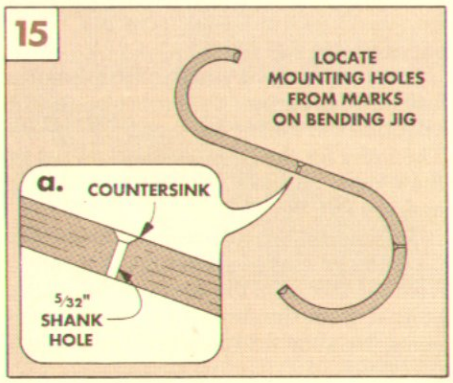

POST

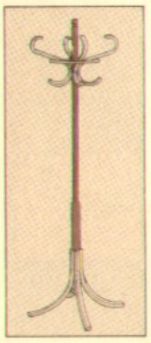

Once the legs and S-hooks are completed, work can begin on the 1½"-thick post. To make the post, I laminated two pieces of ¾"-thick stock together instead of using thicker stock for two reasons. First, ¾"-thick walnut is more commonly available. And second, a laminated post has less of a tendency to twist than a piece of 1½"-thick stock.

To make the **post (C)**, start by ripping two ¾"-thick post blanks to a rough width of 1⅝" and a rough length of 70". Then, glue and clamp the pieces together face to face.

When the glue is dry, scrape off any excess and joint or plane the post until it's 1½" square, see Fig. 16. Then, trim the post to a finished length of 68".

ROUT STOPPED CHAMFER. To give the post an octagonal shape, I routed stopped chamfers on the top two-thirds of the post. The chamfer starts 24" up from the bottom of the post and provides a square surface to attach the legs.

To indicate the beginning of the stopped chamfer, mark reference lines around the post 24" from the bottom end, see Fig. 17. Then, draw a reference line on the router table fence that's aligned with the center of the router bit.

After the post and fence are marked, raise the chamfering bit to cut a ½"-wide chamfer on the post, see Fig. 17a.

To rout the chamfer, ease the post into the router bit so the line on the workpiece aligns with the reference line on the fence. Now, moving the post to the left, rout a chamfer on all four edges of the post, see Fig. 17.

CHAMFER TOP AND BOTTOM. While the chamfering bit is still set up, rout chamfers on both ends of the post, see Fig. 18a. I placed a support under one end of the long post while chamfering the other, and used a router table push block (see Tips, page 4) to keep the post square to the fence, see Fig. 18.

ROUT DECORATIVE GROOVE. After the ends are chamfered, decorative grooves can be routed 1" in from each end. To rout the grooves, I used a ½"-dia. core box bit set ¼"-deep, see Fig. 18b.

DRILL MOUNTING HOLES. After grooves are routed in the post, the next step is to drill pilot holes to mount the legs and S-hooks. The holes for the S-hooks are centered on the width of the post 12" down from the top end, see Fig. 19.

The holes for the legs are also centered on the post, see Fig. 20. Locate the first hole 7" from the bottom of the post and the second hole 4" from the first. After marking the holes, use a 3/32" drill bit to drill the ¾"-deep pilot holes.

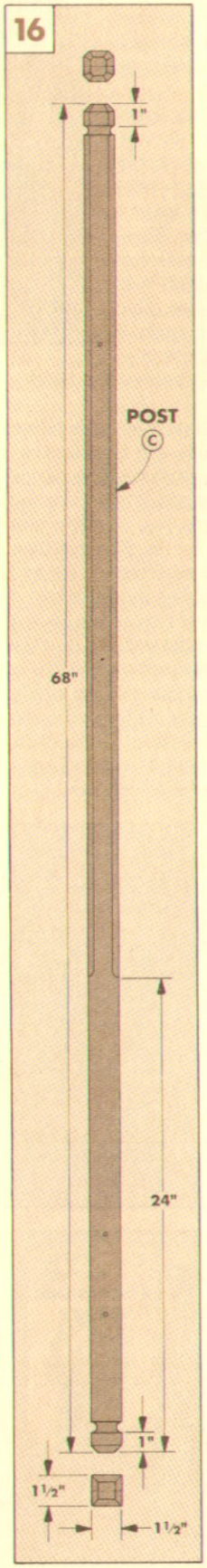

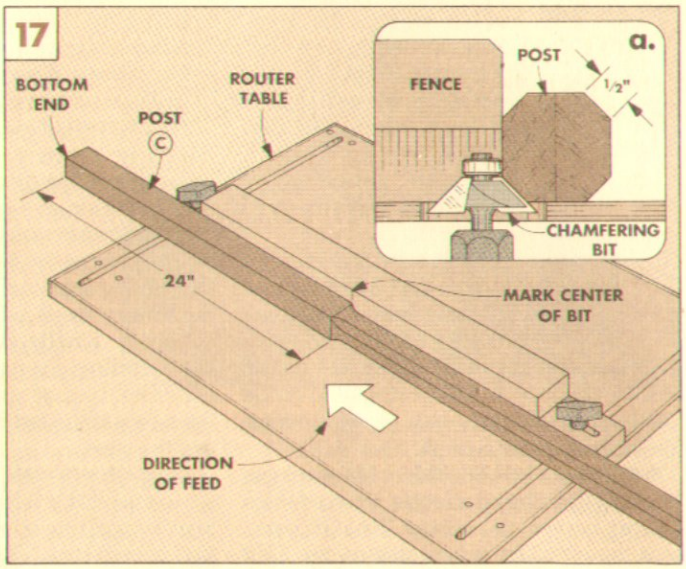

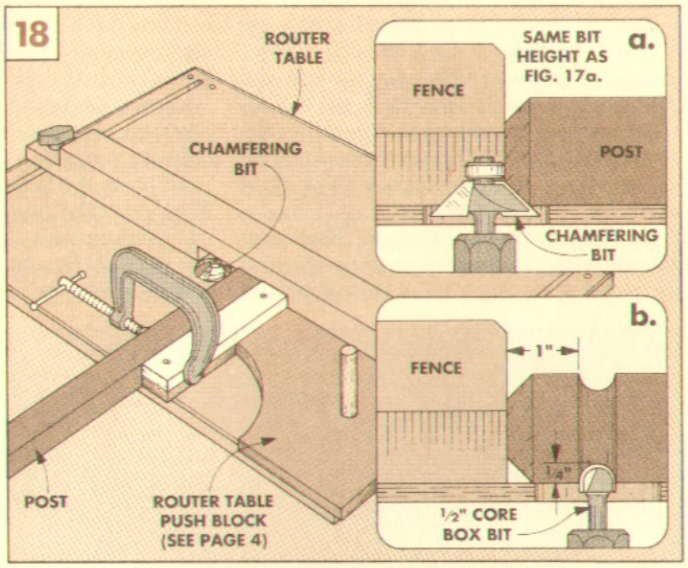

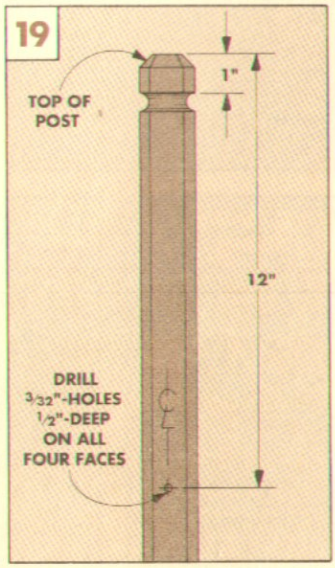

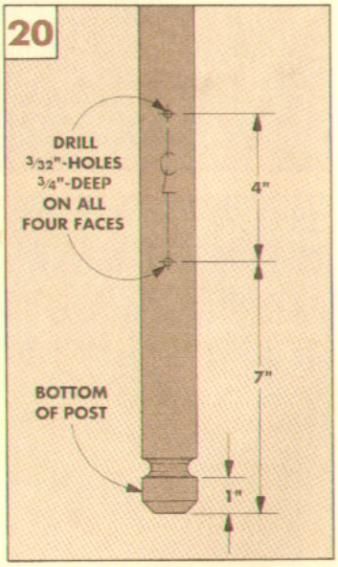

RING

The last of the bentwood components to make is the ring. The ring is built-up from 3/32"-thick strips that are bent around a round form. (For step-by-step instructions on building the ring bending form, see pages 16 to 17.)

STARTER STRIP. After building the bending jig, rip a 40"-long **ring starter strip (D)** from 3/4"-thick stock. (The starter strip is cut longer than the rest of the strips so it'll wrap around the ring form completely and overlap about a quarter-turn.) Soak the strip in water and clamp it to the form to pre-bend it to shape. Then cut ten 24"-long **ring strips (E)** and pre-bend them. Let the strips dry overnight. Then insert the starter strip in the slot in the jig, clamping the strip as you work around the form. Next, apply glue where it *overlaps* and clamp it in place.

COMPLETING THE RING. Then it's a matter of adding the other strips one at a time around the form. Once the thickness is built up to 3/4", the ring can be cleaned up and rounded over with a 3/8" round-over bit. (Again, this is explained on pages 16 to 17.)

SCREW HOLES. After the ring has been made, the next step is to drill four holes to attach the ring to the S-hooks. Since the S-hooks meet the ring at an angle, the holes are drilled at 20° in four equally-spaced locations. To locate the holes, place the ring back on the bending jig and mark where the four holes will be drilled, see Fig. 3.

DRILLING JIG. To position the ring for drilling the angled holes, I built a drilling jig, see Fig. 21. The jig is constructed from 3/4"-thick plywood and is simply an angled platform. To hold the ring in place, I glued a couple cleats to the platform, see Fig. 21. (You could drill the holes without the jig if your drill press has a tilting table.)

DRILL HOLES. After the jig is made, set the ring on the platform. Then, position the platform on the drill press table until a 3/32" drill bit is centered on the thickness of the ring, see Fig. 22a. Now, adjust the depth stop on the drill press to drill 1/2"-deep holes and then drill the four pilot holes.

FINISH. Since all of the parts of the hall tree are screwed together, it's much easier to finish each part before assembly. So before going any further, I rubbed on two coats of tung oil.

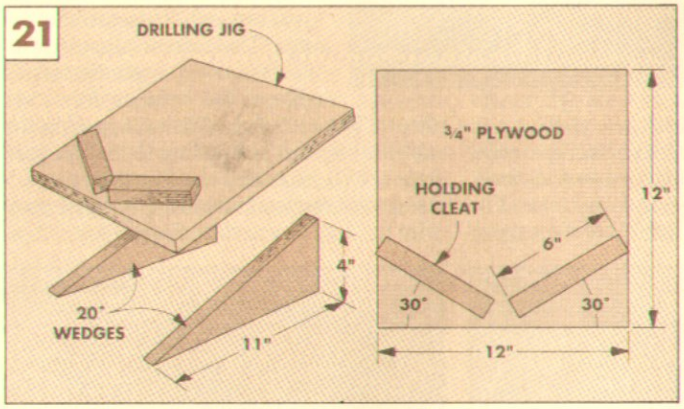

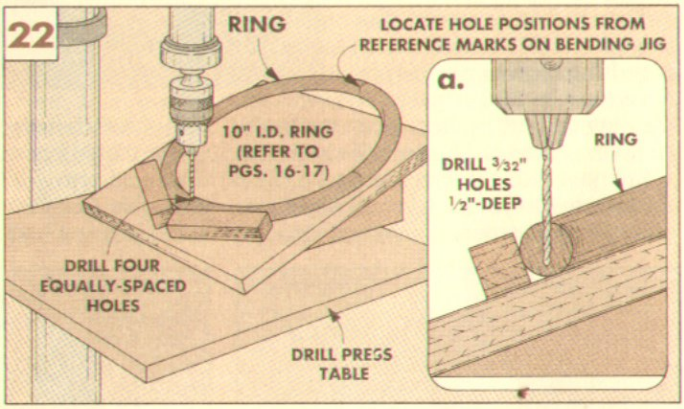

ASSEMBLY

After the finish has dried on all the parts, assembly can begin.

ATTACH LEGS. Start by placing each leg on the post and lining up the pilot and shank holes. Then, screw the leg to the post with 1 1/4" flathead woodscrews, see Fig. 23. Once all four legs were screwed on, I glued ovalhead walnut plugs in each hole, see Fig. 23a. (For more on plugs, see page 19.).

ATTACH S-HOOKS. After the legs are attached, the next step is to screw the S-hooks to the post. To do this, position one S-hook on the post and screw it in place with a 1" brass ovalhead screw, see Fig. 24. (Make sure the large radius on the S-hook is at the bottom.)

Before fastening the remaining S-hooks in place, slip the laminated ring over the S-hook you just mounted. (The ring won't fit over all four S-hooks once they're installed.) Now, with the ring loose on the post, feed the remaining S-hooks through the ring and screw them to the post.

ATTACH RING. The final step is to connect the ring to the S-hooks. To do this, screw the ring to each S-hook with a 1" brass ovalhead screw, see Fig. 24a.

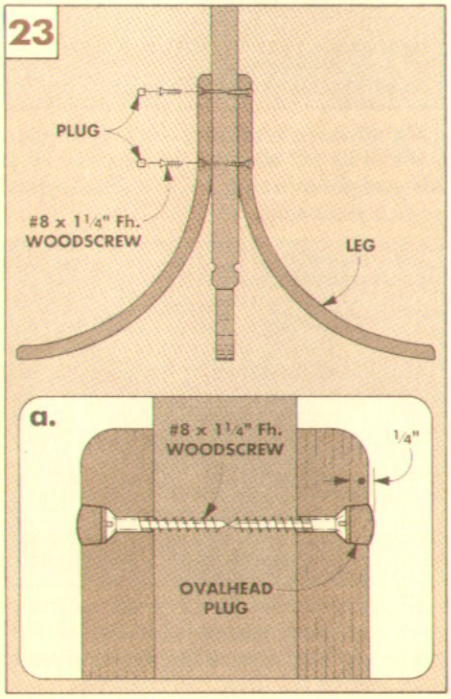

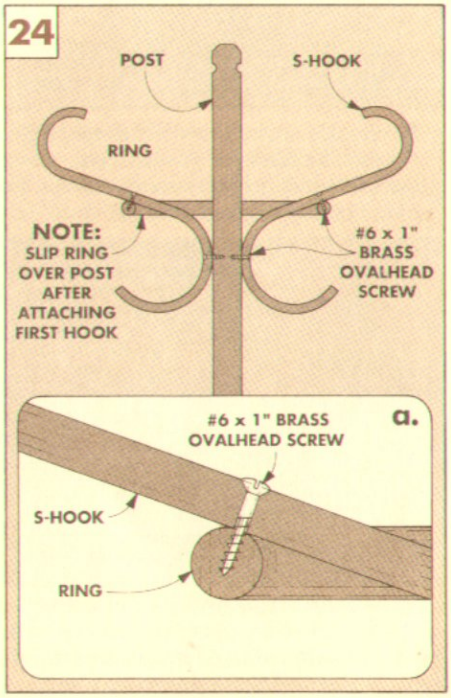

Laminated Ring

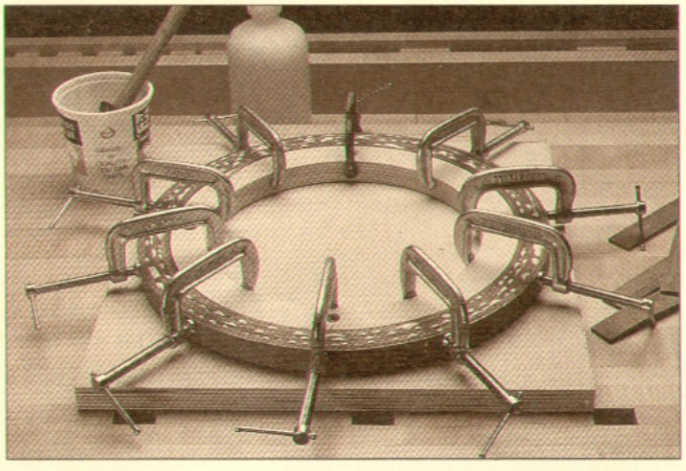

Making a laminated ring is fairly simple. It's just a matter of gluing and wrapping strips around a ring-shaped bending jig.

Okay, but isn't it even easier to cut a ring out of a solid piece? It's easier, but not better for a couple of reasons. First, there would be two weak spots where the grain cuts directly across the thickness of the ring. And second, a solid ring warps with changes in humidity — but a laminated ring won't.

Though I'm using the ring from the Hall Tree (shown on page 10) as an example, this procedure can be used to make any size ring or even a wheel. Just change the size of the jig and cut shorter or longer strips.

BENDING JIG. The bending jig I used is made from two pieces of 3/4" plywood. One piece is a square base. The second piece is a ring-shaped bending form, see photo.

The trickiest part of this project is making the round form — it has to be a perfect circle. To do this, I used a router and a pivot pin. The pin is simply a brad driven into the center-point of the jig. It fits into holes drilled in a large shop-built router base plate. (If you have a trammel point for your router, you won't need to make a new router base.)

BASE PLATE. So I started by replacing the base plate on my router with a new one. (For more on this, see page 19.) After it's replaced, drill three 1/16" pivot holes in the plate.

To locate the holes, insert a 1/4"-straight bit in the router and measure out from the cutting edge. The closest hole to the bit (3 3/4") is used to rout the *inside* edge of the bending form, see Step 1. The next hole (5") is for routing the *outside* edge of the bending form. The third hole (5 3/4") isn't used to make the form. It's used after the laminated ring is glued up to trim the ring to a perfect circle.

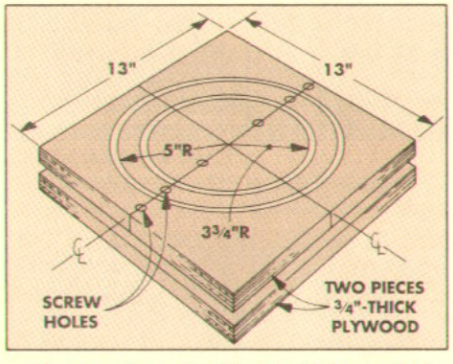

1 *Locate center lines and draw circles for the circular form. Then, screw plywood blanks together so the screws are within the ring and inner circle.*

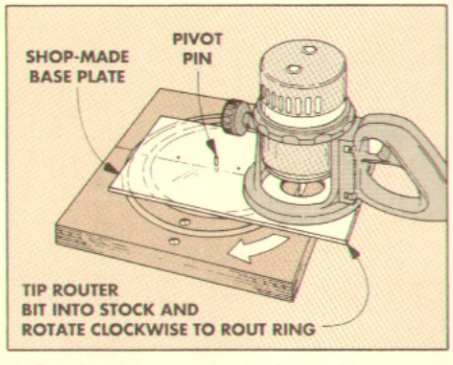

2 *Attach a new base plate to the router. With 1/4"-straight bit, rout the ring-shaped form using 3 3/4" radius and 5" radius pivot holes.*

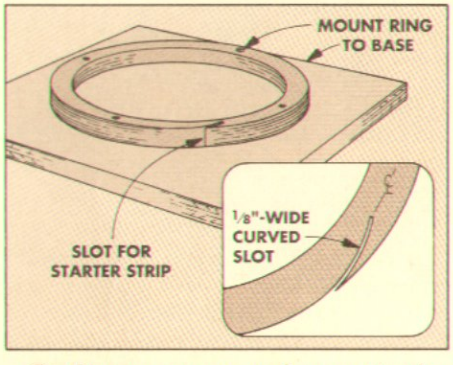

3 *Remove screws and separate ring form and base. Draw 1/8"-wide slot in ring and cut the slot with a sabre saw. Next, turn the base over and screw ring in place.*

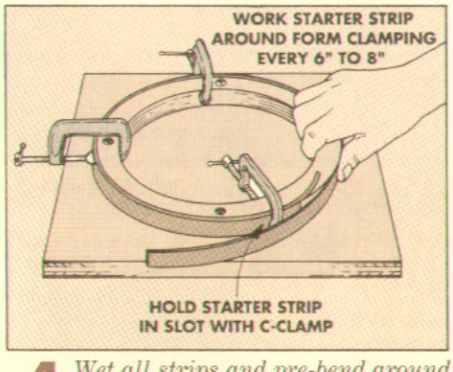

4 *Wet all strips and pre-bend around form. Let dry overnight. Then, begin again with the starter strip, inserting it into the slot and clamping every 6" to 8".*

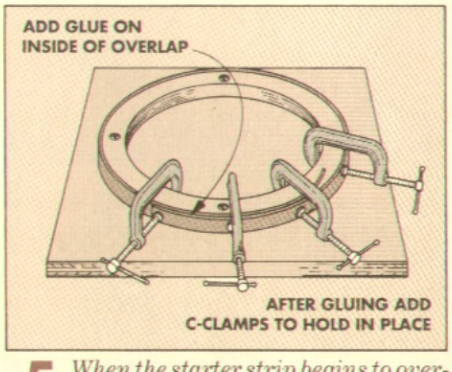

5 *When the starter strip begins to overlap itself, apply glue to the overlapping end. Then, remove the clamps near the slot, overlap the strip, and re-clamp.*

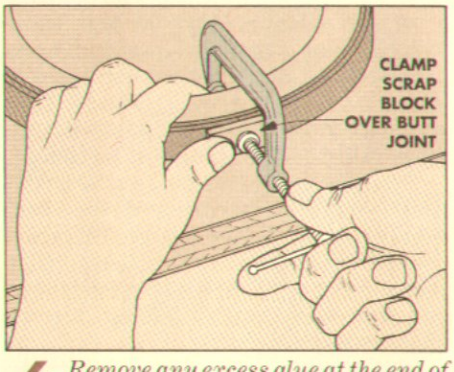

6 *Remove any excess glue at the end of the first strip and then butt the second glued strip to the first. Use a 1/4"-thick scrap block to clamp the butt joint tight.*

MAKING THE FORMS. Once the router base plate is complete, work can begin on the ring-shaped bending form itself. Start by cutting out a plywood blank and laying out center lines on it, see Step 1. Then, draw the form circles for reference during routing.

The ring form is cut from this blank by making repeat passes with the router until the bit cuts through the blank. To keep the blank in place during routing, I screwed it to the top of a second piece of plywood, see Step 1. Locate the screws so they won't be in the path of the bit. Then, drive a 17 gauge brad (pivot pin) into the centerpoint and snip off the brad 1/4" above the surface.

ROUT BENDING FORM. Once the pivot pin is in place, the form can be routed. To do this, set the router bit to make a 1/4"-deep cut and make a pass with the base plate first lowered over the 3 3/4" pivot hole. Then make a pass with the base plate lowered over the 5" pivot hole. Now, lower the bit 1/4" at a time until the bit cuts through the top layer, see Step 2.

CUT SLOT. After the top layer is routed through, the next step is to cut a slot into the ring-shaped form for the first strip of the laminated ring. The starter strip is an extra-long strip that acts as a foundation layer for additional strips.

To cut the slot, first unscrew the bending form from the base. Then, draw an 1/8"-wide curved slot on the form, see Step 3. (I used a large coffee can lid to get the desired curve.) Next, use a sabre saw to cut the slot.

ASSEMBLY. Once the slot is cut, re-assemble the jig by flipping the base over to get a clean surface (no grooves from routing) and screw the ring-shaped form onto the base. Next, to keep the glue from sticking, apply a generous coat of paste wax to the jig.

LAMINATE RING. With the jig complete, work can begin on the laminated ring itself. Before the strips can be glued together, they need to be wet bent. To do this, soak a strip in water for 15 minutes and clamp it to the form without glue. Keep the strip on the form for 15 minutes, remove it, and wet bend the remaining strips. Then allow all the ring strips to dry overnight.

Once the strips are pre-bent, the gluing process can start, see Step 4. Begin by inserting the 40"-long starter strip into the slot and clamp the strip to the form as you work around the form. When you reach the point where the strip overlaps, apply glue to the overlap and clamp it in place, see Step 5.

As the remaining 24"-long strips are wrapped around the form, they are butted together at the ends, see Step 6. Make sure the strips are flush at the top. And continue wrapping until the ring is at least 3/4"-thick, see Step 7.

Once the ring is laminated, the top and bottom edges are planed flush, see Step 8.

TRIM RING. The next step is to use a router to trim the ring to a circle. To do this, begin by mounting a scrap block inside the bending form, see Step 9. Then, use the reference lines on the ring form to locate a centerpoint on the block and install a pivot pin.

With the pivot pin in position, the *outside* of the ring can be trimmed to a perfect circle. Use the pivot hole that's farthest from the router bit (5 3/4") and a 1/4"-straight bit. Then, slowly rout counterclockwise around the ring to prevent the last strip from tearing out, see Step 9.

Then, to trim the *inside* of the ring, remove the waste section of the starter strip with a hand saw, see Step 10. Next, feather the inside of the starter strip to form a smooth circle.

ROUND OVER EDGES. To complete the ring, use a 3/8" round-over bit on the router table and a rub arm to round over the edges, see Steps 11 and 12. (For more on using a rub arm, see Shop Notes on page 18.)

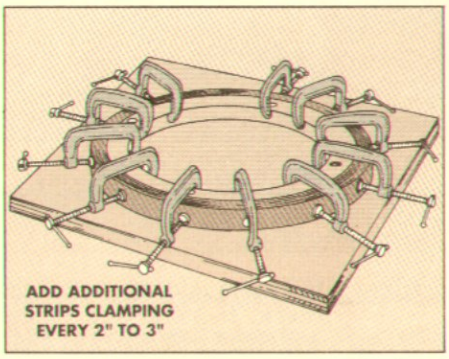

7 *Work glued strips around the form, clamping as often as necessary to get adequate glue squeeze-out between strips. Continue until ring is at least 3/4" thick.*

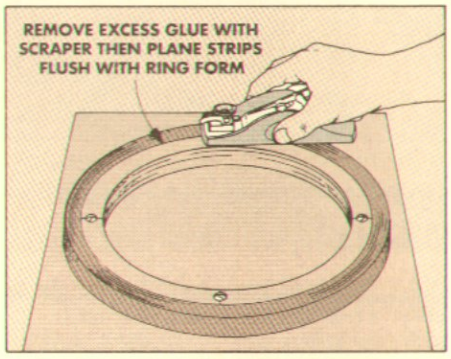

8 *After the glue dries, scrape any excess glue from the top of the ring with a scraper. Then, plane both edges of the strips flush with the bending form.*

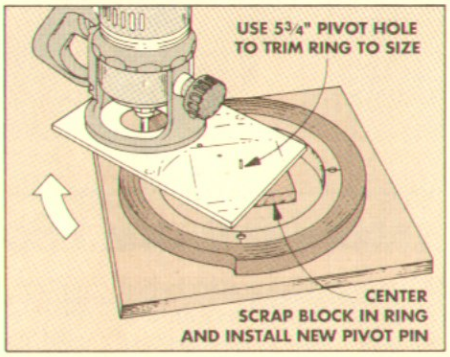

9 *Screw filler block inside bending form and drive a brad into the center. Use pivot hole with 5 3/4" dia. to trim the laminated ring to a perfect circle.*

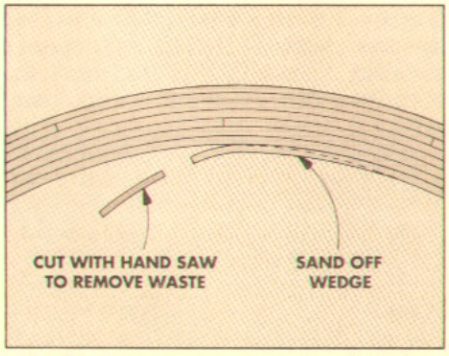

10 *Remove ring from bending form and cut off excess starter strip with a hand saw. Then, sand the inside of the ring until it rotates easily on the form.*

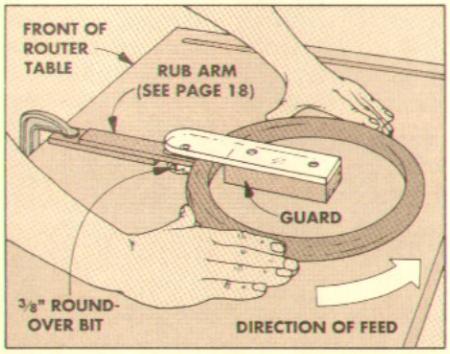

11 *Clamp a rub arm to the router table and round over the outside edges of the ring using a 3/8" round-over bit. Set the bit to cut 3/8" above the table.*

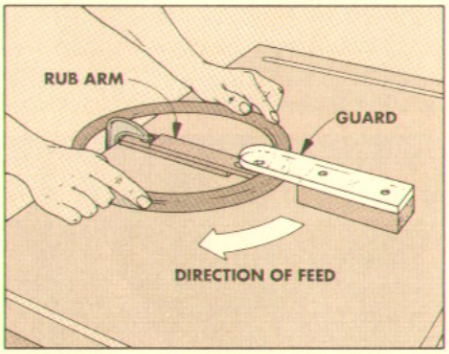

12 *Round over the inside edges of the ring with the rub arm in place. When routing the inside edges of the ring, rout in a clockwise direction.*

Shop Notes

RUB ARM

■ When making the laminated ring for the Hall Tree shown on page 10, I wanted to put a 3/8" round-over on all four edges. However, I ran into a problem using the 3/8" round-over bit in the router table.

The problem is the location of the bearing — it's too far above the cutting edge on some bits. Normally, this isn't a problem since the bearing has plenty of surface to ride against.

But, on the ring I wanted to rout a mating round-over. The problem was that the bearing surface would be removed during the first router pass and the bit would cut a shoulder on the second pass, see Fig. 1.

USING A RUB ARM. To solve this problem, I made a rub arm from a piece of 1/4" Masonite. The rub arm acts as a substitute bearing surface and when it's installed, it rubs against the centerpoint of the workpiece, see Fig. 2. This prevents the bit from removing too much stock.

CONSTRUCTION. To make a rub arm, cut a notch slightly larger than the diameter of the router bit bearing in a piece of 1/4" Masonite. Then, glue a base piece under the arm, see Fig. 3.

Note: For the Hall Tree ring, I cut an arc on the end of the rub arm to allow the ring to rotate smoothly during routing.

Next, to get the rub arm aligned with the bearing on the bit, turn on the router. Then, slide the rub arm into the router bit until the end of the rub arm is flush with the bearing, see Fig. 2. Now, turn off the power and clamp the rub arm to the router table, refer to Step 11 on page 17.

Once the rub arm is installed, matching round-overs can be routed without creating an unwanted shoulder.

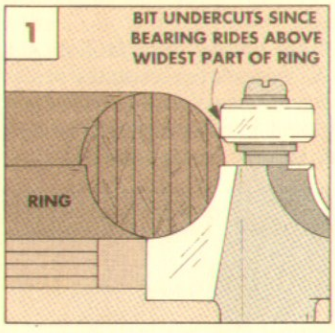

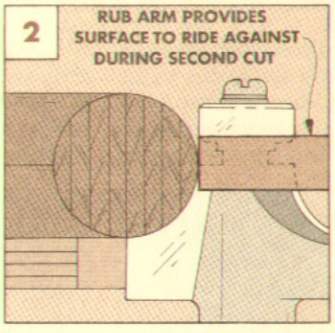

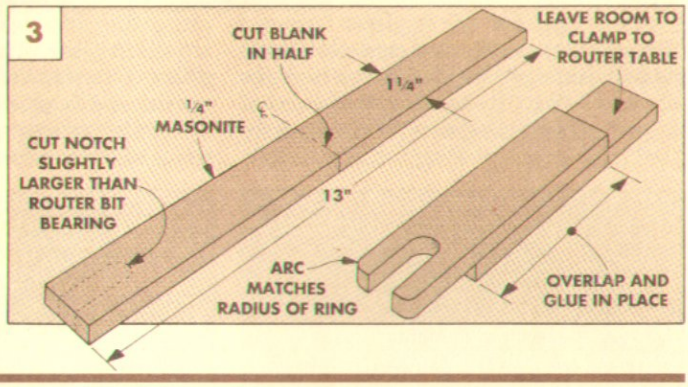

SANDING DRUM PROBLEMS

■ I came across a problem when using a sanding drum on the drill press to thickness sand parts of the Hall Tree. I noticed the edges I sanded weren't flat — they were concave, see Fig. 1.

When I examined the drum sander, I discovered the top and bottom of the drum were bowed out. (Note: This only seems to be a problem with the large hollow drums and not the smaller solid rubber drums.) This problem arises whenever a rub block is used to press the workpiece into the drum sander, see Fig 1.

DRUM CONSTRUCTION. To understand why this causes the drum to bow, you have to look at how the drum holds the sanding sleeve in place. When the nut on the drum shaft is tightened, it pulls the bottom flange up. This causes the rubber drum to expand, locking the sleeve in position, see Fig. 2.

THICKNESS SANDING. During normal sanding, the drum and its shaft turn at the same speed. But when you thickness sand, the workpiece is inserted between the drum and a rub block. This can cause the drum to slow down, even stop if enough pressure is applied — but the shaft will still be rotating since it's tightened into the drill press chuck. This over-tightens the drum, causing it to bow.

PVC INSERT. The problem is eliminated by sliding a piece of PVC pipe *inside* the rubber drum. This allows the drum to tighten, but keeps it from bowing. For my 3" drum, I cut a piece of 1½"-dia. PVC pipe to a length of 2¼". It's exactly the right size to fit inside the drum.

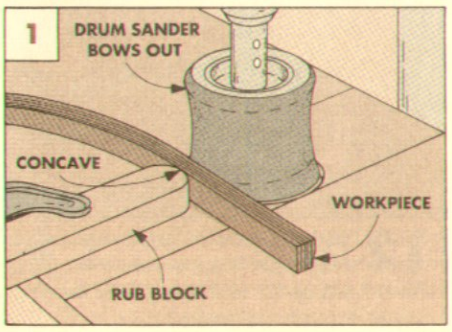

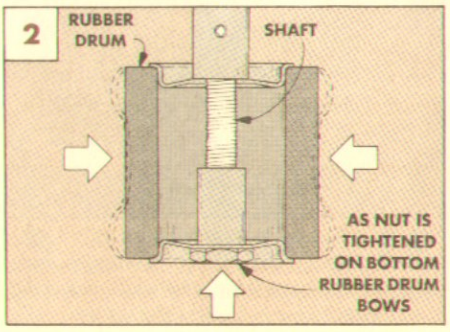

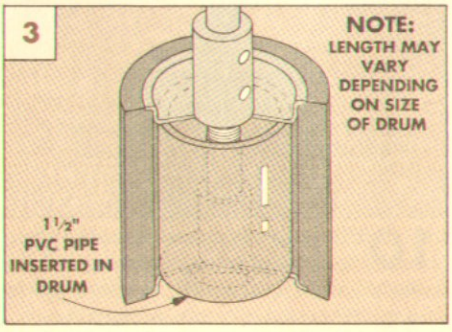

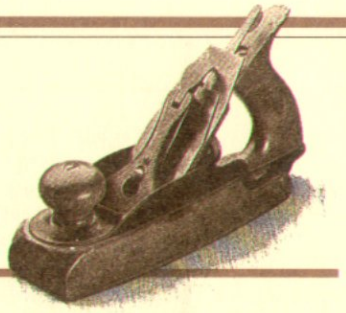

ROUTER BASE PLATE FOR CUTTING CIRCLES

■ To cut the round shelves for the Fern Stand and to make the ring bending jig for the Hall Tree, I replaced the base plate on my router with a larger shop-built base. The new base plate acts as a trammel attachment for cutting and routing circles.

BASE PLATE. I used a piece of ¼" Plexiglas (or you could use Masonite) for the new base. To cut circles for the projects in this issue, the new base needs to be extra long. To make the base plate large enough for the ring on the Hall Tree, cut the Plexiglas to a width of 7" and a length of 9½", see Fig. 1.

To attach this piece of Plexiglas to your router, position your router's original base plate over the new plate and use it as a template to locate and drill the screw holes and large center hole.

PIVOT HOLE. The next step is to drill a 1/16"-diameter hole in the new base plate to fit over a pivot pin, see Fig. 2.

To locate the pivot hole, first mount a straight bit in the router (I use a ¼"-straight bit). Then, measure from the cutting edge of the bit to the hole. This distance is equal to the radius of the circle you want to cut. For example, on the Fern Stand I needed 7"-dia. shelves so I drilled a hole 3½" from the edge of the bit, see Fig. 2.

For the pivot pin I used a 17-gauge brad and drove it into the workpiece, snipping it off ¼" above the surface.

ROUTING CIRCLES. Once the pin is in place, you're ready to start routing. To keep the bit from cutting into the bench when routing all the way through the blank, I screwed it (in the waste section) to a piece of plywood and then clamped the plywood to my bench.

To rout a circle, set the bit ¼" deep and drop the base plate over the pivot pin. Then, tip the router at a slight angle so the bit is slightly above the surface and turn on the router, see Fig. 2. (Note: If you're using a plunge router, you won't have to tip it.)

Now, slowly plunge the bit into the blank. Then pivot the router *clockwise* around the circle until you reach the start point. Repeat this process, lowering the bit ¼" (or less) between passes until the bit cuts through the blank, see Fig. 3.

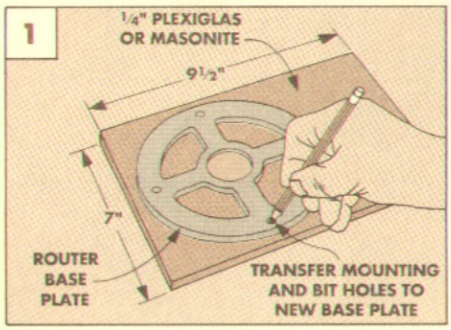

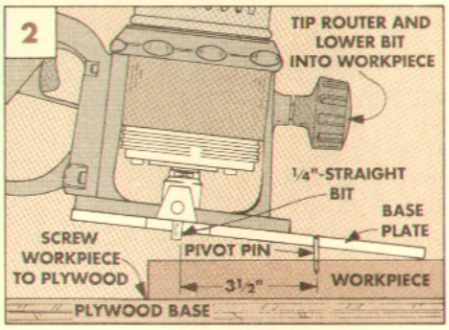

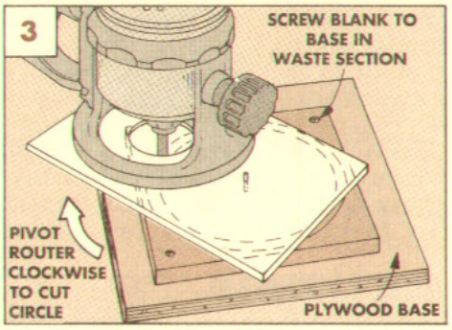

WOOD PLUGS

■ Wood plugs are commonly available in three styles: flathead, ovalhead, and button, see Fig. 1. And they're available in ¼", ⅜", and ½" diameters.

INSTALLING PLUGS. Flathead plugs are installed so the top of the plug is flush with the workpiece. Ovalhead plugs have a rounded top that protrudes from the workpiece. And button plugs have a shoulder that keeps the head even higher off the surface.

Flathead and button plugs are simple to install since either the top or shoulder of the plug is flush with the work surface.

Ovalhead plugs, however, can be driven in too far. And it's easy to flatten their rounded top.

Since I used ⅜" ovalhead plugs for the Fern Stand and Hall Tree, I needed a simple way to install the plugs without flattening the tops. So I made a plug setter that matches the plug's rounded top, see Fig. 2.

CONSTRUCTION. To make the plug setter, first cut a ¾" dowel, 1½"-long. Then, drill a shallow hole in one end of the dowel with a 7/16" twist drill bit, see Fig. 2.

SET THE PLUGS. To use the plug setter, position an ovalhead plug in a hole and place the setter over the plug. Then, tap the setter just until it bottoms out on the workpiece, see Fig. 3a.

Note: Don't continue tapping the setter after it bottoms out or you'll leave a doughnut-shaped dent in the work surface.

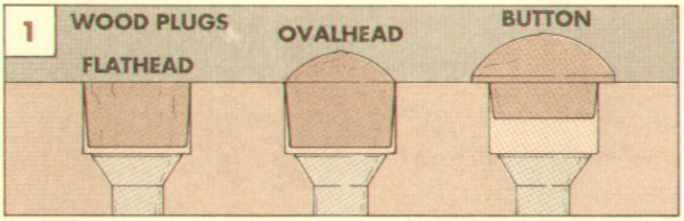

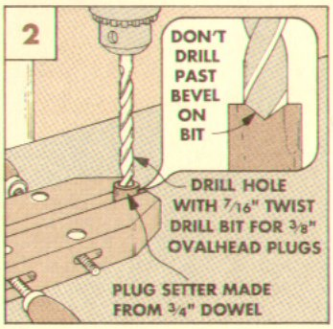

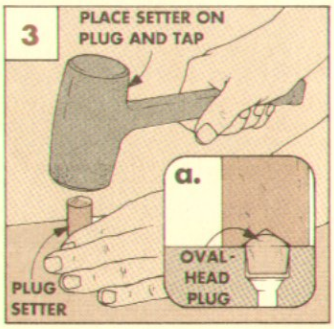

Fern Stand

There are two challenges to building this fern stand. The first is bending the legs with a gentle curve on both ends. The second is cutting the shelves into perfect circles. Fortunately, simple jigs make both tasks a snap.

You would think that making bent legs — especially legs with a bend on *both* ends — would require a complicated jig and maybe a special technique that involves steaming the wood.

Actually the bent legs on this stand are bent *laminations*. They're made of thin strips of oak with two strips of walnut in the center for accent. These strips are laminated (glued) together and shaped on a bending jig. (For more on bent lamination, see page 6.)

BENDING JIG. To bend the curves on both ends of the legs, all you need are ten clamps that open to at least 4", and a simple bending jig that's made out of plywood. The jig is designed with gentle curves so the strips of wood can be bent to shape without steaming, soaking, or any special preparation.

SHELVES. The bent legs are attached to three round shelves. I sized the shelves to hold a medium sized (6"-dia.) flower pot, but the shelf diameter can be varied to almost any size.

Cutting the shelves into perfect circles is the second challenge on this project. But again, it's easier than it might seem. All I used is a router fitted with a shop-made base plate that has a pivot hole drilled in it. When the hole is set over a pivot pin, the router swings around it to cut perfect circles.

FINISH. As for the finish, the primary requirement is that it resists moisture. I applied two coats of satin polyurethane.

MATERIALS

A Oak Leg Blanks (7) 3/4 x 1 1/16 x 44
(Each blank yields three strips. Minimum of 18 strips needed.)

B Walnut Leg Blanks (3) 3/4 x 1 1/16 x 44
(Each blank yields three strips. Minimum of six strips needed.)

C Walnut Shelves (3) 3/4 x 8 x 8
(Edge-glue these three blanks from six 4" x 8" pieces.)

3/4" x 5 1/2" - 48" (1.8 Bd. Ft. Oak)

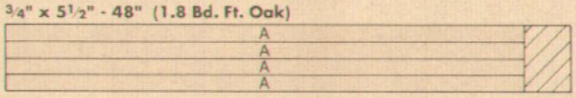

3/4" x 5 1/2" - 48" (1.8 Bd. Ft. Oak)

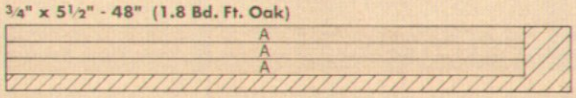

3/4" x 5 1/2" - 48" (1.8 Bd. Ft. Walnut)

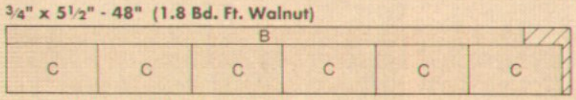

3/4" x 3 1/2" - 48" (1.2 Bd. Ft. Walnut)

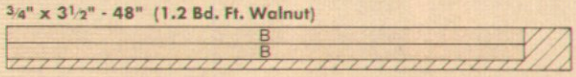

Also required for bending jig:

- (1) 10" x 44" piece 3/4"-thick plywood
- (1) 14" x 21 1/2" piece 3/4"-thick plywood
- (1) 14" x 21 1/2" piece 1/4"-thick Masonite or plywood

BENDING JIG

The first step in building the fern stand is to make the legs. But before you can even start on the legs, you have to make a bending jig. Begin making the jig by cutting a base from ¾" plywood, see Fig. 1.

BLANK FOR FORMS. The next step in building the jig is to add sections of straight and curved forms to bend the thin strips to shape. Since the strips are 1 1/16" wide, these forms should be at least 1" thick. I made the forms by gluing a piece of ¼" plywood to a piece of ¾" plywood to produce a blank 14" by 21½", see Fig. 2.

STRAIGHT FORMS. Six pieces are cut out of this blank to make the bending form: four curved pieces and two straight pieces. To make the straight sections, just rip two pieces 1½" wide by 21½" long, see Fig. 2.

CURVED FORMS. To make the curved sections, scribe four half circles on the remaining part of the blank, see Fig. 2. (These curves are spaced to produce curved forms 1½" wide with a ¾" space between them, which will be the thickness of the legs.) After drawing the half-circles, cut the blank in half, see Fig. 3. Then cut out the quarter-circle forms with a sabre saw.

MOUNTING THE FORMS. After all the form pieces are cut, the bending jig can be assembled. Start by screwing the inside (smaller) curved pieces to the base.

To align the ends of the two curved pieces, draw a line down the length of the base, 6½" from one edge, see Fig. 4. Then mark reference lines 18" to each side of the centerline, see Fig. 4. Now screw down the curved pieces so the outside of the curve touches the 18" reference marks at the ends and the line down the center.

Next, screw one of the straight pieces on the line down the center so it's aligned with the ends of the curved pieces.

Note: The other straight piece and curved pieces are not screwed to the base. They're used to clamp the strips to the fixed forms.

Finally, to prevent the strips from sticking to the base and bending forms, rub paraffin (or paste wax) on the surfaces that will come in contact with the strips during gluing.

CUTTING THE STRIPS. Now you can start cutting the strips for the legs. First cut seven blanks of ¾"-thick oak and three blanks of ¾"-thick walnut to widths of 1 1/16" and lengths of 44". Now, resaw the blanks into thin strips by setting the rip fence 3/32" from the saw blade, see Fig. 5. (For more information on ripping thin strips, see page 7.)

To be sure your saw is set correctly, test it by cutting eight strips of scrap stock. Then stack the strips and measure the thickness, see Fig. 6. If the setting is correct, the stack will be ¾"-thick.

When the setting was correct, I resawed a total of 20 **oak strips (A)** and 8 **walnut strips (B)**. (I cut two extra strips of each in case some broke while bending.)

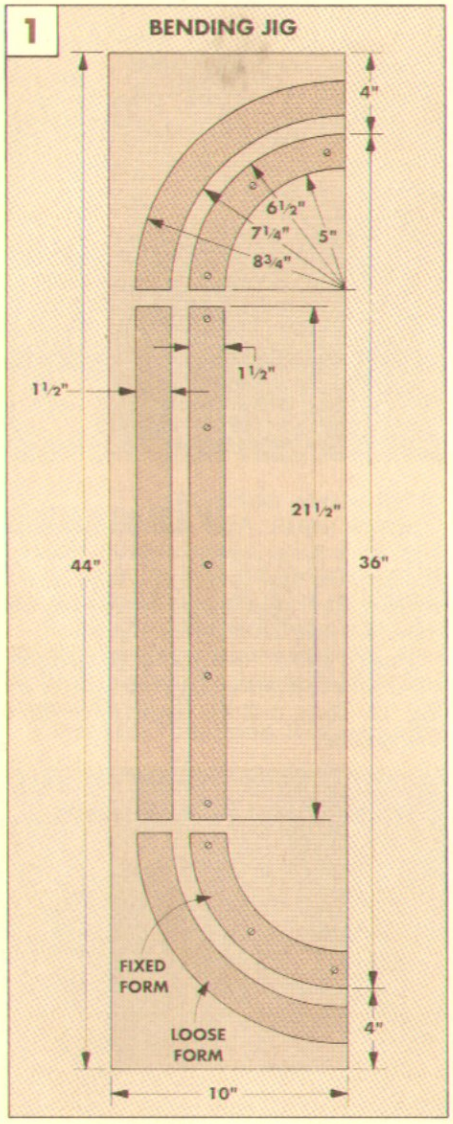

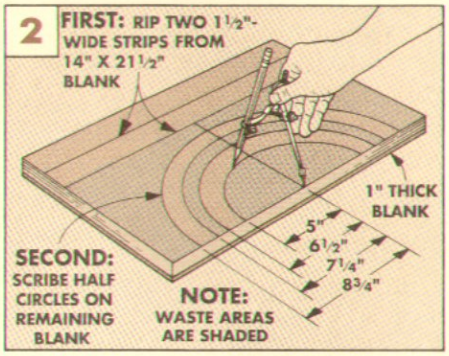

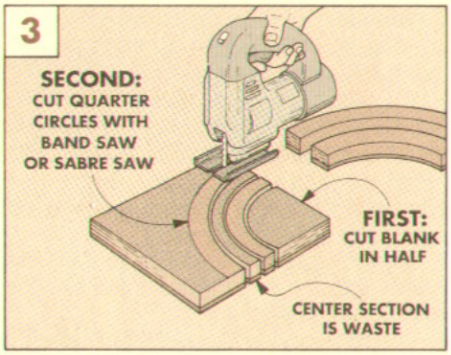

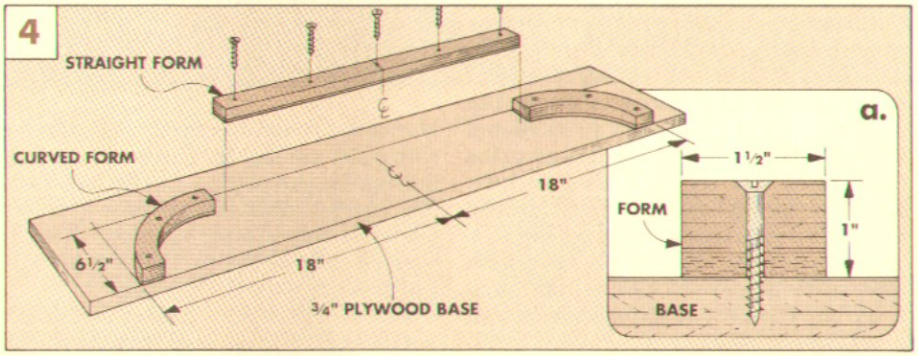

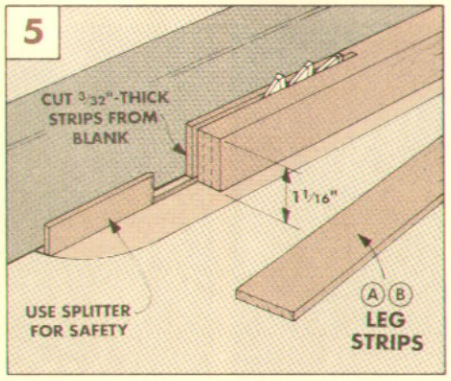

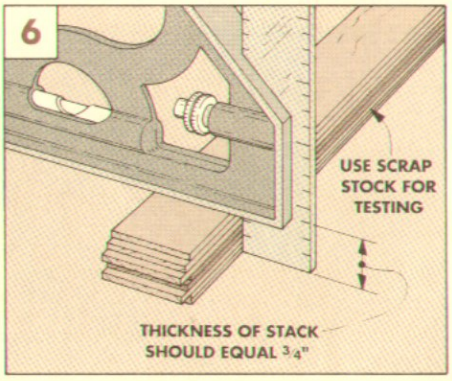

LEGS

After ripping all the oak and walnut strips, the next step is to glue-up the legs.

GLUING THE STRIPS. Start by spreading the glue on one side of each strip. Then, as the glue is applied, stack the strips like a sandwich: three oak, two walnut, and three oak strips. Now pick up this stack and lay it on its side against the straight form on the bending jig.

CLAMPING. Now, add the other straight form and clamp everything together, starting in the center and working toward the ends, see Fig. 7. Then, align the top edges of the strips flush by gently tapping them down with a hammer.

BENDING THE STRIPS. Next, the ends of the strips can be bent around the fixed curved pieces. To do this, use the loose curved piece to press the strips against the curved forms. When they're bent as far as they can be bent by hand, put on a clamp, centered on the curved section and tighten it down, see Fig. 7.

Then add two more clamps to each curved section. Now, tighten all the clamps so the pressure is even along the entire leg.

CLEAN-UP. After waiting about six hours for the glue to dry, remove the leg from the bending jig. Then, scrape off the worst of the dried glue with a paint scraper. Be gentle — the paint scraper is a rough tool and can easily tear or gouge the strips.

Now the legs can be planed to their final width of 1". To avoid tear-out, I used a low angle block plane.

CUT TO LENGTH. As it comes out of the jig, the leg is too long and must be cut to length. You'll need to mark the top and the bottom ends of each leg, and then cut off the excess.

To keep all three legs a uniform length, I marked the cut-off locations on the *jig*. Use a combination square to mark the location of the top of the leg 4" in from the end of the fixed curved form, see Fig. 8. Then mark the location of the leg bottom 2¾" from the end of the other fixed curved form, see Fig. 9.

Now, put the leg back in the bending form and transfer the cut-off locations from the jig to the leg. Then, cut off the extra stock with a band saw or hand saw.

SHAPING THE ENDS. When the extra stock is removed, round over the top end of the leg with a file, see Fig. 8a. The bottom end requires a second cut to create a flat foot. To do this, use the combination square to draw a line on the bottom of the leg, centered on the squared end, see Fig. 9a. Cut off the excess and then shape the tip with a file.

SHAPING THE SIDES. To soften the corners of the legs, I used a ⅜" round-over bit mounted in the router table and took a series of light passes, see Fig. 10.

SCREW HOLES. After rounding over the legs, mark the locations to drill the holes for the screws that attach the legs to the shelves. Here again I used the jig to lay out the screw hole locations, see Fig. 11.

Finally, drill a ⅜"-diameter counterbore ¼"-deep at each of the marked locations, see Fig. 12. Then, drill the shank hole with a 3/16" drill bit.

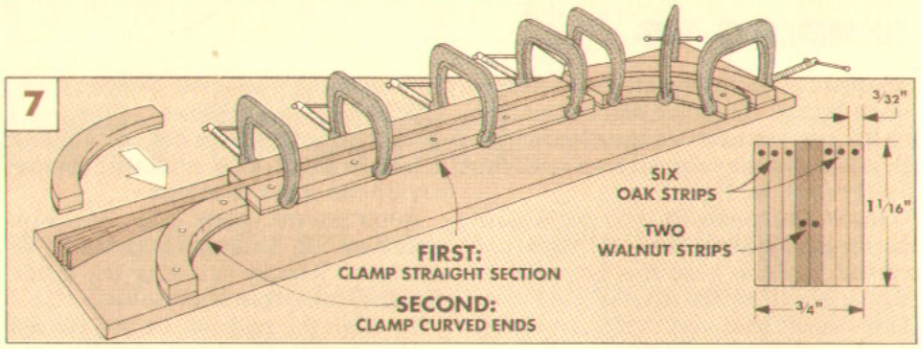

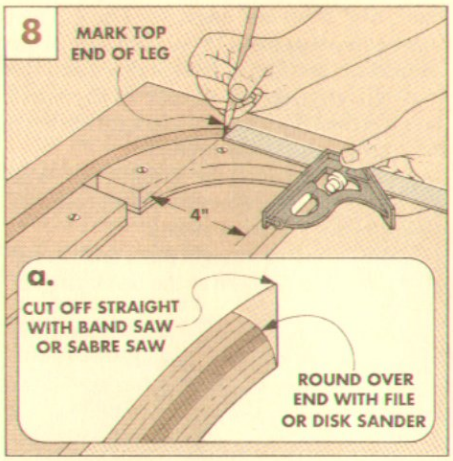

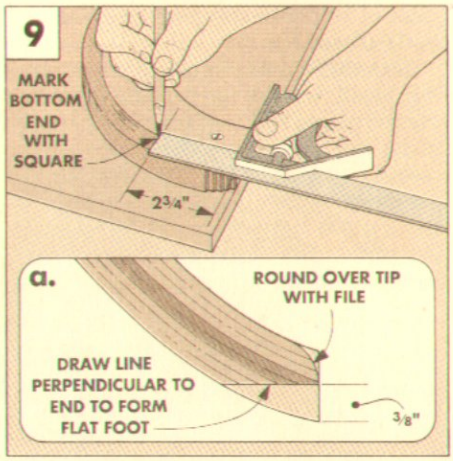

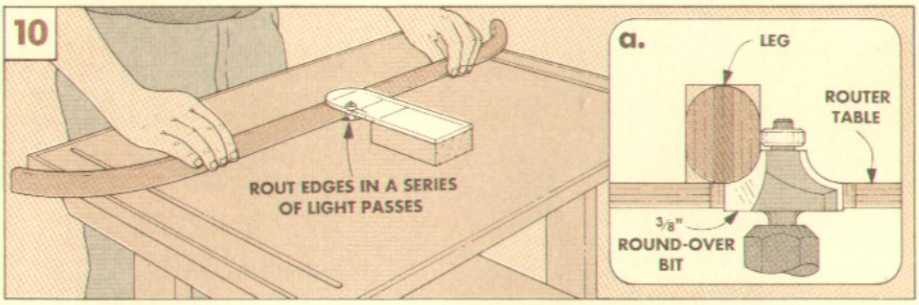

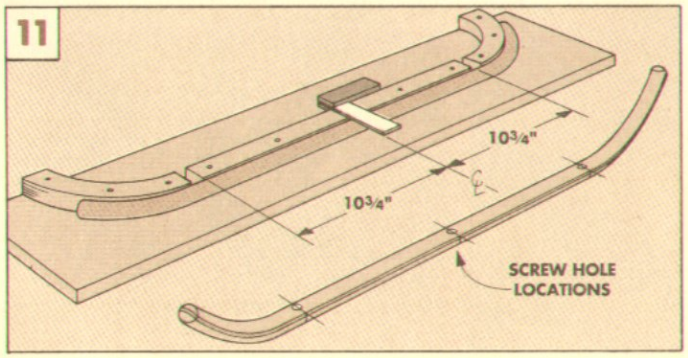

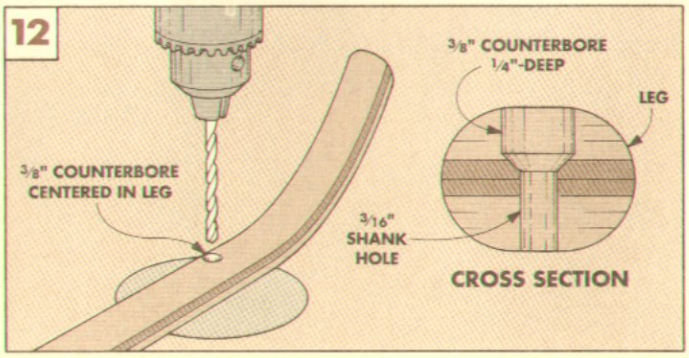

SHELVES

When all three legs are complete, work can begin on the shelves. The circular **shelves (C)** are cut from ¾"-thick walnut blanks with a router. To make them, start by gluing up three 8" x 8" squares, see Fig. 13.

ROUT CIRCLES. To cut the blanks into perfect 7"-diameter circles, I used my router fitted with a special base plate. This base is slightly larger than the original base to accomodate a pivot hole 3½" from the router bit. For more on cutting circles, see page 19.

LEG NOTCHES. The legs are screwed into notches cut into the edges of the shelves. To mark the centers of these notches, use a protractor and mark every 120°, see Fig. 14.

NOTCH TEMPLATE. Each notch is cut to fit the side of a leg. It's easiest to lay them out by first making a template that's the same shape as the legs, see Fig. 15. To do this, round over the edges of a scrap piece of 1"-thick by 1"-wide stock, using a ⅜" round-over bit. Use scrap that's long enough to be safely handled on the router table.

Now, to mark the notches on the shelves, center the leg template over the 120° marks on a shelf. Set it ⅜" in from the edge, and draw a line around the template onto the shelf, see Fig. 15.

BULLNOSE EDGES. Before cutting the notches, I routed a bullnose edge on each shelf, see Fig. 16. To do this, mount a ½" round-over bit in the router table, adjust it so it's 5/16" above the table, and rout both the top and bottom edges, see Fig. 16a.

CUT OUT NOTCHES. Now the notches can be cut out, see Fig. 17. I used a band saw to remove the stock, but a jig saw or coping saw would also work.

Then, to smooth the inside surface of the notch, use a ¾"-diameter sanding drum on the drill press, see Fig. 18. Now, test the legs in the notches to be sure they fit.

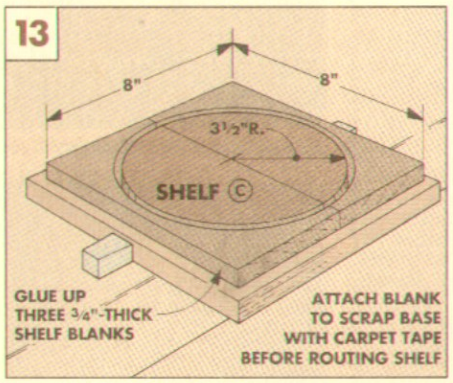

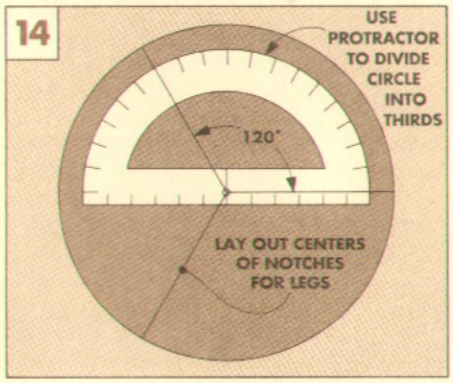

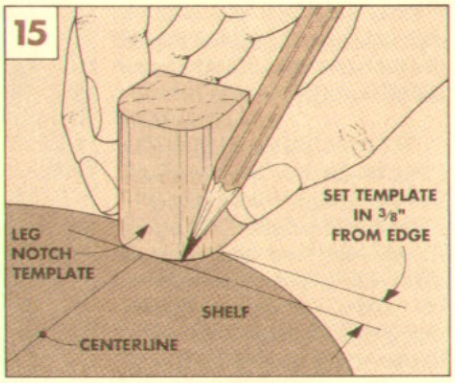

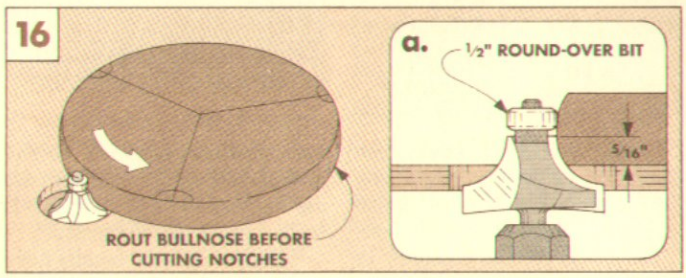

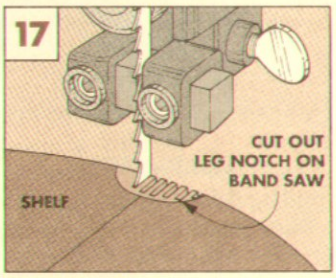

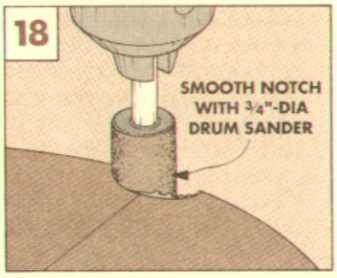

ASSEMBLY

To assemble the legs and shelves, start by drilling a pilot hole centered in each notch. To do this, clamp the shelf into a large hand screw or between two pieces of scrap stock so the shelf is held securely at 90° to the drill press table, see Fig. 19.

SCREW LEGS TO SHELVES. Next, screw the legs into the shelf notches with No. 8 x 1½" flathead wood screws, see Fig. 20. Once the fern stand is assembled, check to see that the shelves are perpendicular to the legs. If the stand is twisted, loosen the screws, adjust the stand and then re-tighten the screws.

PLUG SCREW HOLES. Finally, fill the screw holes with ovalhead walnut wood plugs, see Fig. 20a. (For more on inserting these plugs, see Shop Notes, page 19.)

FINISH. To protect the fern stand from moisture and water stains, I applied two coats of clear satin polyurethane, sanding lightly between coats.

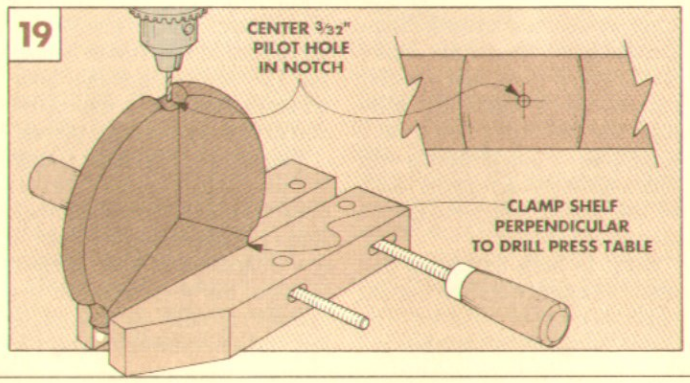

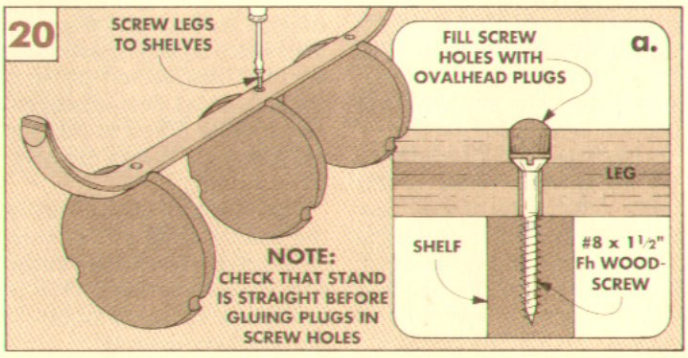

Talking Shop

FLAT OR QUARTERSAWN?

I have an old table that's missing a leaf and I want to replace it. But I'm having a problem finding the right kind of wood. I've been told that the wood is "quartersawn."

Can you tell me what's meant by quartersawn? Where does it come from? And what's the advantage to using it?

Jesse Murdoch
Billings, Montana

First of all your problem isn't finding the right *kind* of wood — it's finding the right *cut* of wood. As you said, your table top was made using *quartersawn* lumber. Today, the type of lumber that is typically available in most lumber yards and building centers is *flatsawn*.

CUTTING LOGS. The difference between them is in the way they're cut at the saw mill. When logs are cut into lumber, the goal is usually to produce the largest quantity of usable lumber with the fewest defects.

Typically, the clearest lumber comes from just beneath the bark. And the least desirable area is the very center (or pith) of the tree. This center area is weaker and prone to cracking and checking.

SAWING AROUND THE LOG. One way to avoid the less desirable area in the center is to saw "around the log." To do this, a sawyer (the person who cut logs into lumber) starts with the best looking side of the log, cutting off boards until he comes to a defective area. Then the log is turned 90° and sawn again. This leaves the center portion intact, which can then be made into posts or lower grade lumber.

THROUGH AND THROUGH. If the log is rather small, or has many defects, the sawyer may decide it's too time consuming to saw around the log. Instead, boards are cut one after another. This is sometimes referred to as cutting "through and through."

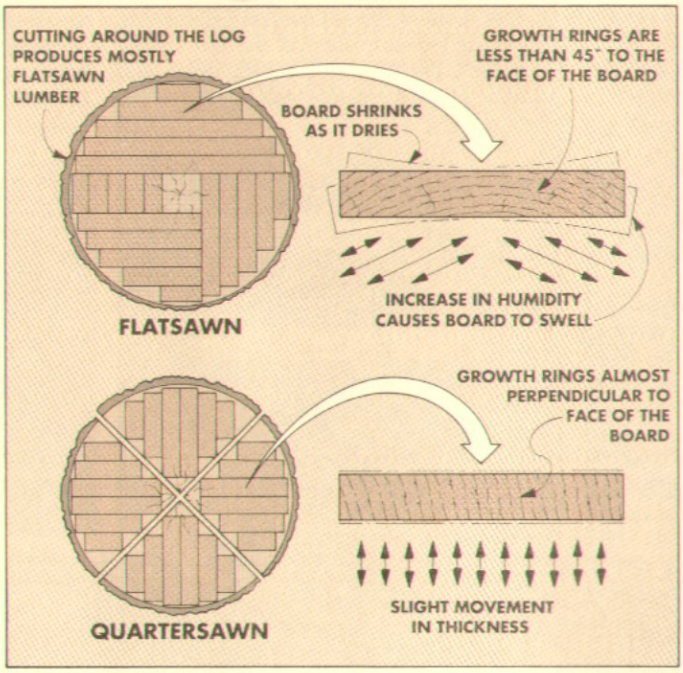

FLATSAWN FACE GRAIN

QUARTERSAWN FACE GRAIN

FLATSAWN

Both of these methods produce mostly flatsawn (or plainsawn) lumber — the most common cut of lumber available.

HORIZONTAL END GRAIN. To determine if a board is flatsawn, start by looking at the end grain. If the growth rings are less than 45° to the face of the board, it's flatsawn, see drawing above. Another sign that a board is flatsawn is an oval or U-shaped face grain pattern, see photo above.

QUARTERSAWN

Another method for cutting a log into boards is called quartersawing. With this method the log is cut in half and then quartered, see drawing. Then boards are cut from each one of the quartered sections.

VERTICAL END GRAIN. Cutting the boards using this method creates a different pattern on the end. The growth rings will be almost perpendicular to the face of the board, see drawing.

FACE GRAIN. However, the direction of the end grain isn't the only difference between flatsawn and quartersawn lumber. The face grain also changes. In woods with pronounced grain patterns (like red oak), quartersawing produces almost iridescent rays or flakes on the face of the board, see photo.

WOOD MOVEMENT. Another difference is the way quartersawn lumber resists dimensional changes (shrinking and swelling) and cupping with changes in seasonal humidity.

All boards expand and contract along their growth rings. On a flatsawn board this causes the board to move and possibly cup across its width, see drawing. On the other hand, on a quartersawn board there's very little movement across the width of the board and virtually no chance of cupping.

RIFT. In both flatsawing and quartersawing, a certain amount of lumber will be *riftsawn*. The growth rings on this lumber will run approximately 45° to the face of the board. Here again the easiest way to determine this is by looking at the end grain.

Riftsawn boards usually have a straight grained appearance without a strong pattern or rays. So it makes an excellant choice if you want to "play down" the grain on a project.

AVAILABILITY. If quartersawn lumber is so great, why isn't it readily available? The problem with quartersawn lumber is that it's time consuming to mill and it's wasteful. It takes a large diameter log to get boards of any significant width, so many of the pieces are too narrow to be useful. The end result is that quartersawn lumber is expensive and hard to find in large pieces.

Finally, don't be discouraged if your local lumber dealer doesn't list quartersawn lumber. Even a flatsawn log will have a few quartersawn and riftsawn boards. So sort through the boards carefully — you might just find what you're looking for.

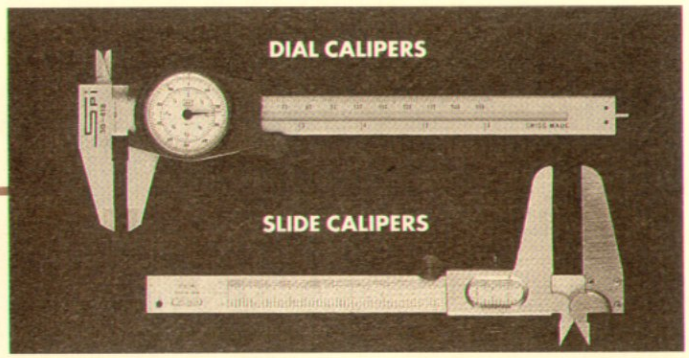

CALIPERS

How do you accurately measure thin strips of wood? This question came up as I was cutting the strips for the laminated projects in this issue. You could try to balance a tape measure or a ruler on the edge of the thin strips — but this may not yield very accurate results. Or you could do what I do — use a calipers.

SLIDE CALIPERS. The slide calipers or caliper rule has been used by machinists for centuries to measure internal and external dimensions, see lower calipers in photo. One jaw of the calipers is fixed to the main part of the tool. And the other jaw is part of a slide that moves in or out until both jaws touch the workpiece.

Once in position, the slide can be clamped with a knurled clamp nut. Then the calipers can be used to make repetitive measurements. Slide calipers are available in either inch or metric graduations.

DIAL CALIPERS. A dial calipers differs from a slide calipers in that the slide is connected to a dial indicator, see upper calipers in photo. As the slide moves, the dial provides a direct readout that's easier to read than a slide calipers.

In addition to inside and outside measurements, all dial calipers can be used to measure depth. When the caliper jaws are opened, a metal rod that's attached to the slide protrudes from the bottom of the calipers and is a convenient depth gauge, see photo. This can be used to check the depth of a hole you just drilled. Or even the depth of a dado or groove.

Most dial calipers have dials that are graduated in thousandths of an inch, which is plenty accurate for most woodworkers. They can also be found with 1/64" graduations. While a 1/64" is a rather small increment on a ruler or a slide calipers, it's easy to read on a dial calipers. For more information on where to find dial calipers, see Sources on page 31.

USING CALIPERS. To use calipers, slide the jaws closed on a workpiece. Then, if the calipers has a lock or clamp, you can lock the slide in position and remove the calipers to read it. Or you can read the dial with the calipers tight on the workpiece. (I use the second method because there's a chance of error when moving the calipers.)

OTHER USES. I find myself reaching for the dial calipers more and more. I keep one next to the planer for checking the thickness of stock between passes. It's also great for checking inside dimensions, such as the width of a dado. Or the actual diameter of a hole you just drilled in a workpiece.

CLAMPING TIME

No matter how many clamps I have, it seems I'm always coming up short. How soon can I take the clamps off to use them for more work?

John Fitzgerald
Nevada, Iowa

Clamping time depends on a lot of things, including the kind of glue you use. Here at *Woodsmith*, we usually use Franklin Titebond Wood Glue (a yellow glue), so I called Jeff Shoemaker, a technical specialist in the Wood Adhesives Division of Franklin International, for his advice.

"The general rule I follow is 45 minutes for edge-gluing, and 5 to 10 minutes for assembly joints, like tongue and groove," explained Jeff. He quickly pointed out that this is a general rule and doesn't apply in every situation.

MOISTURE CONTENT. There are four main things to consider when gluing. The first is the moisture content of the wood.

Moist wood needs more clamping time, but you may not always know the exact moisture content of the wood you're working with. So if you have reason to believe that your wood may not be near the optimum 6%-9% moisture content, it's a good idea to leave the clamps on a little longer than Jeff's general rule.

FIT. The second consideration is the way the two pieces of a joint come together. The better the fit, the less clamping time is necessary. A good joint will require less glue, and less glue means less drying time. A sloppy joint requires more glue to fill the gaps and the extra glue takes more time to dry. (And results in a weaker joint.)

TEMPERATURE. The temperature of the air, wood, and glue also has an affect on clamping time: the cooler they are, the more clamping time is necessary. "The rule here," says Jeff, "is to double the clamping time for every 10 to 15 degree drop in temperature."

For example, if you would leave the clamps on a panel for 45 minutes when it's 70 degrees, keep the clamps on for about 90 minutes when the temperature is only 55 degrees.

I decided to try an experiment that would check out Jeff's information about the relationship between the drying time of yellow glue and air temperature.

I put dollops of yellow glue on two pieces of wood, and then put one piece in the refrigerator. Then I watched the different rate at which the glue dollops dried.

After an hour, the difference was obvious. The glue that sat at room temperature had skinned over completely and had a good grip on a toothpick standing up in the middle of it. The glue in the refrigerator, while somewhat thicker from the cold, had no skin and the toothpick just flopped over.

STRESSING THE JOINT. The final consideration on drying time (and the only one you have much control over) is how soon you can put some stress on a glue joint after removing the clamps. If I plan to do some handwork on a glued-up panel, I will remove the clamps in 30 minutes and go right to work.

But sending a just-glued up panel through a planer is another story. I wait at least four hours, and that's only if I'm in a big hurry. Normally, I prefer to wait overnight.

I'm not so concerned that the joint will fail. The problem is that newly glued joints swell up.

When you glue two pieces of wood together, the moisture in the glue is absorbed into the edges of the wood along the joint. The wood expands with the additional moisture.

If you were to plane or sand the wood immediately, the joint would appear fine at first. But after the wood has a chance to dry out, you'd wind up with a sunken joint (a slight depression along the joint line).

OTHER OPTIONS. One more thing. If you're in a big hurry, you may want to consider using a woodworking super glue or a five-minute epoxy. They're more expensive than yellow glue, but the clamping times are extremely short.

Radial Arm Saw

The radial arm saw is the perfect tool for cutting long pieces of stock to manageable lengths. But the problem is, the tables on most radial arm saws are too short. It becomes a real balancing act to cut a 2-foot length from an 8-foot board.

To solve this problem, I replaced the particleboard table that came on my saw with a new, longer table. (Besides, the old table had gotten pretty chewed up over the years.)

SOLID-CORE DOOR. I found the perfect replacement table at the local home center. It's a solid-core door that measures 30" wide and 80" long. (Slightly blemished, these doors are often available for about $25.)

These doors are usually 1¾" thick with a solid core of particleboard. They're heavy and stable — good for saw tables. The faces of solid-core doors are typically hardwood veneer. And even if the face is blemished, it still works fine for a saw table.

Note: Instead of using a solid-core door you could build up two layers of ¾" plywood for a replacement table.

PROTECTIVE SURFACE. Another thing that's always bothered me about working on the radial arm saw is the way the table gets chewed up with repeated cutting. As the kerfs in the table get wider, sawdust builds up in the kerfs. And the workpiece can chip out on the bottom side since there's no support where the blade exits.

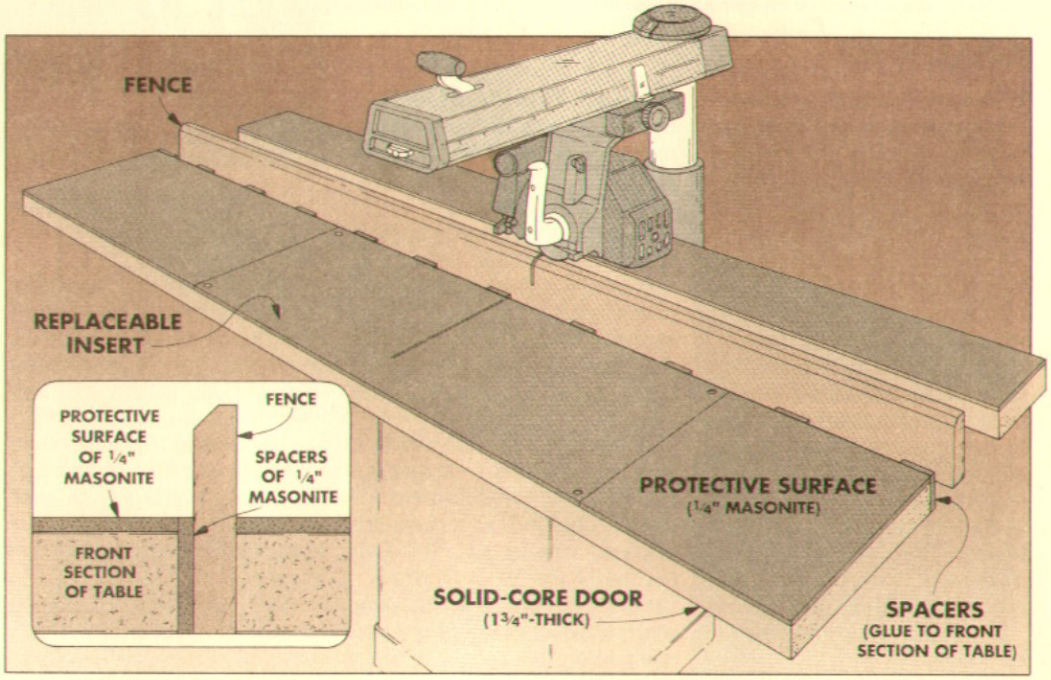

To help keep the new table in good shape, I screwed down a protective surface of ¼" Masonite to the top of the table, with a replaceable middle section, see drawing above. Now, when the Masonite becomes too cut up, I replace the middle section and start fresh with a smooth surface.

SPACERS. As a further precaution against sawdust build-up, I added another feature to the new table. This is simply a row of spacers attached between the fence and the front section of the table, see drawing.

These spacers produce a series of gaps between the fence and the cutting surface of the table. The gaps allow sawdust to fall through the table rather than accumulate on top of the table and keep a workpiece from butting tight against the fence.

I cut the spacers out of ¼" Masonite to a length of 2". The width of the spacers is determined by the combined thickness of your table and any protective surface. Position the spacers at 7" to 8" intervals, and glue them to the inside edge of the front section of the table. Shop Note: Hot melt glue works best for this.

SUPPORT. Finally, if you position the longer table very far off-center (left-to-right on the base) you may want to support the heavy end with a cabinet, or simply a 2x4 brace. This keeps the table more stable when you're cutting a long piece of heavy stock.

FENCE SUPPORT LEDGE

■ It's not necessary to put a long table on your radial arm saw just because you want a long fence. But if you do add a long replacement fence (like the one shown on page 30), you may want to consider adding a ledge to support long workpieces, see Fig. 1.

A ledge that extends from the end of the table to the end of the fence keeps a long workpiece from drooping over the end of the table. The ledge also lets you use a stop block beyond the end of the table.

MAKING THE LEDGE. I cut the support ledge from 1½"-thick stock to a width of 2". To attach it, first butt the end of the ledge to the end of the saw table, keeping the top surfaces of the saw table and ledge flush. Then screw the ledge in place from the back side of the fence.

If you ever remove the fence, you can return it to its original position by simply butting the ledge up to the end of the table.

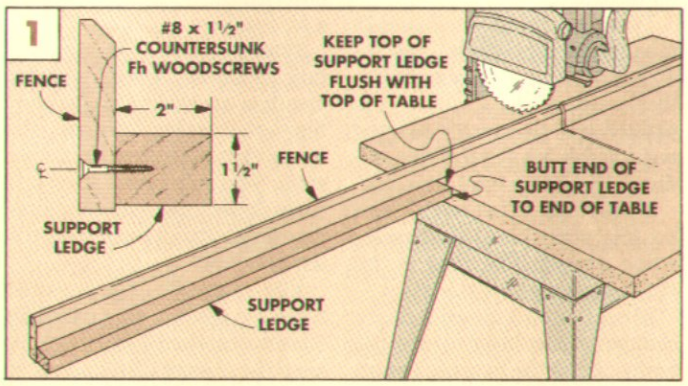

MITER JIG

■ Although I use the radial arm saw mostly for cross-cutting, there are times when I use it for cutting miters. But the problem is moving the saw arm from 90° to 45° and back again. It takes a lot of fiddling around to get it reset to cut a perfect 90° after cutting miters.

My solution was to build a miter jig. Then the saw arm can always be kept at 90° while the jig is clamped to the saw table for cutting miters.

The jig consists of a base and fence guides (all cut from less than a quarter sheet of ¾" plywood), and a pair of removable hardwood fences. The base clamps to the radial arm table, and the guides form channels for the removable fences.

BASE. Begin making the jig by cutting the **base (A)** to a width of 14½" and a length of 24", see Fig. 1. Then draw a reference line (that will align with the blade) centered on the length.

INSIDE FENCE GUIDE. Now cut a square (16" x 16") **inside fence guide (B)** and screw it down to the base so it overhangs one edge, see Fig. 1. Align the corners of the guide with one edge of the base, and a third corner on the centerline. After it's screwed down, cut it off flush with the edge of the base.

OUTSIDE FENCE GUIDES. Next, screw two **outside fence guides (C)** parallel to the edges of the inside fence guide, see Fig. 1. Screw these in place with temporary spacers of ¾" stock (the same thickness as the fence) sandwiched between the inside and outside guides.

FENCES. With all the guides screwed in place, work can begin on the two **fences (D)**. These lengths of ¾" hardwood fit in channels formed by the fence guides. (The fences can be removed when mitering a wide workpiece on the opposite side of the jig.) Once in position, the fences can be locked in place.

I cut the fences from a 1½"-wide strip of hardwood, see Fig. 2. The length of the fences isn't critical — they can be cut long to accommodate longer workpieces.

The system for locking the fences in place is a simple one.

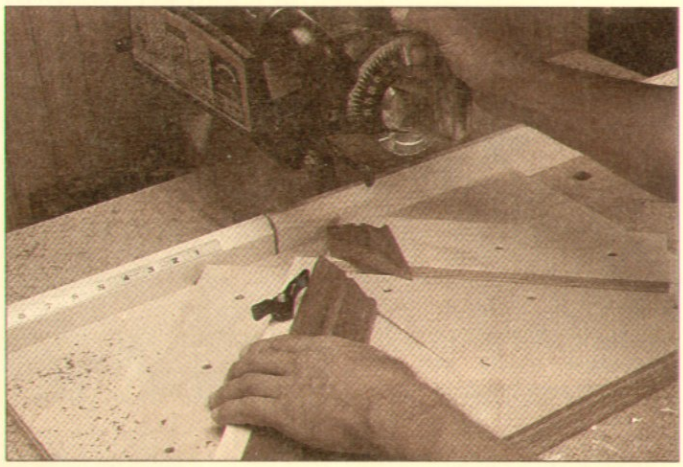

First drill a ¼" countersunk screw hole for a machine screw centered on the bottom edge of the fence, see Fig. 2. Then rip a ⅛"-wide by ¾"-deep slot, also centered on the bottom edge.

Tightening a wing nut on the end of the screw causes the screw head to slide up into the countersink. As it slides up, the slot opens and locks the fence in its channel.

USING THE JIG. To use this jig, butt it against the fence on the radial arm saw. Then clamp the jig down to the saw table with the centerline on the base aligned with the saw blade.

To avoid cutting through the jig, raise the blade 1⅜" above the table. Then cut a shallow kerf on top of the inside fence guide.

To cut a miter, first hold or clamp the workpiece against the fence. (This keeps the workpiece from creeping.) Then pull the saw through the workpiece.

Shop Note: By clamping a stop block to the fence at the end of the workpiece, multiple pieces (like frame sides) can be cut to a uniform length.

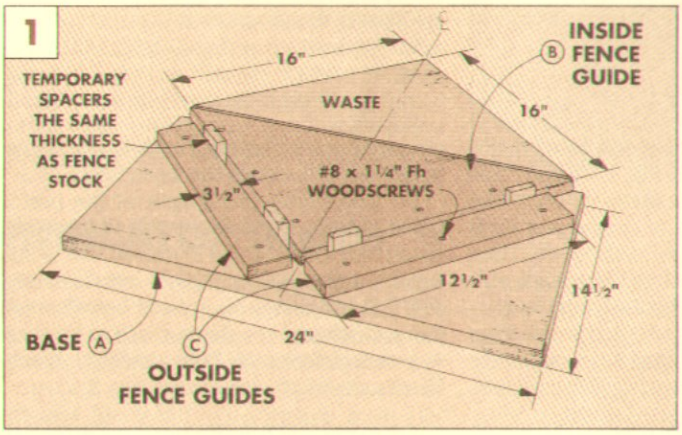

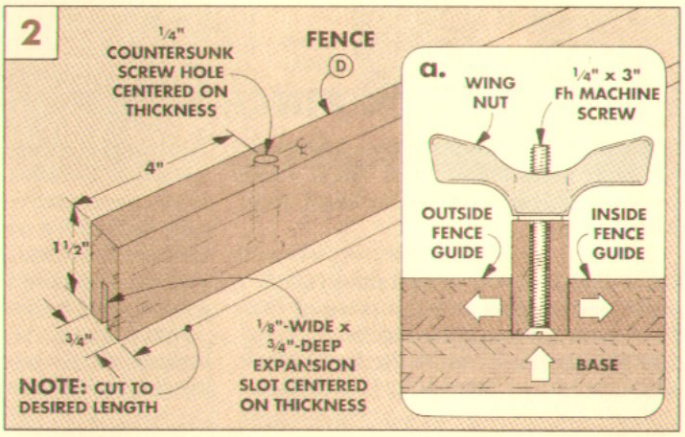

SAFETY HANDLE

■ I get uncomfortable when I cross-cut short pieces on the radial arm saw. I just don't like my fingers that close to the blade. So I made a safety handle to hold small pieces.

The boomerang-shaped handle is cut from a 12"-long piece of 1½"-thick stock, see Fig. 1. The long section (about 9") of the handle keeps your hand away from the blade. The short section (3") holds the workpiece tightly against the fence. (The short and long sections form a 60° angle.)

By placing the end of the long section against the radial arm saw fence, you can apply a lot of leverage on the workpiece.

Finally, glue a strip of sandpaper on each end of the handle to keep it from sliding on the fence or the workpiece.

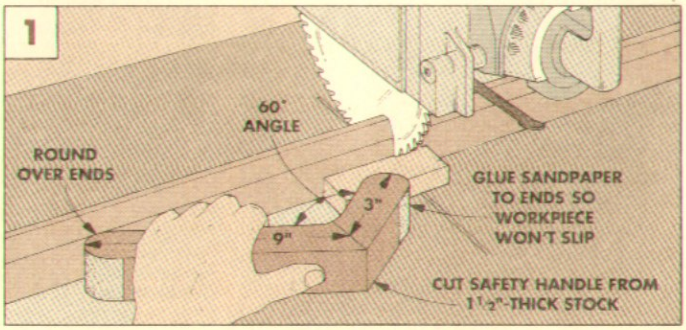

Fence & Stop Block

When cutting on the radial arm saw there's often a lot of measuring and marking of a workpiece before cutting it to length. But this "measure, mark, and cut" method leaves room for error. To eliminate the guesswork I added this fence and stop system.

There are two parts to this system: a high fence and a stop block that locks onto the fence, see photo. Once the stop block is tightened down, you can cut piece after piece to uniform length without measuring or marking.

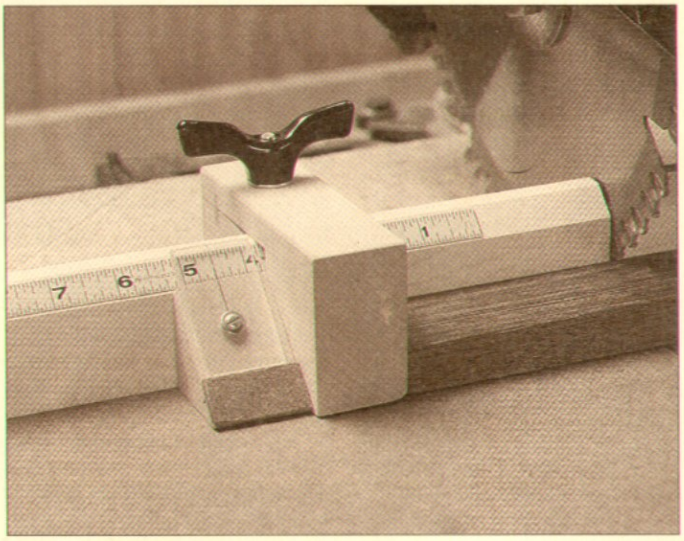

FENCE. The new fence is taller than the one that comes with most radial arm saws. This extra height gives you more surface to support the back edge of a workpiece. Plus, it lets you stack workpieces and cut them in a single pass.

As long as I was replacing the fence, I decided to make it longer, too. (To support the longer stock this fence can now handle, you may want to add a longer table or support ledge, see page 26.)

STOP BLOCK. The stop block is the heart of this system. It rides on the new fence several inches to the left of the saw blade so there's no interference with the motor housing.

I made the stop block from 1½"-thick stock (you can use a common 2x4). There's a wing nut on top of the block to lock it in place at any point along the fence. Then, to eliminate measuring before each cut, I added a self-adhesive measuring tape to the fence. The measurement is read through a Plexiglas "hairline" indicator.

Note: The hardware to build the stop block is available at many hardware stores, or through *Woodsmith Project Supplies*, see page 31.

MITERS. One thing needs to be said here about this system. If you swing the radial arm to cut miters, you'll cut through the metal measuring tape on the new fence. I think it's more accurate to keep the radial arm permanently set at 90° anyway. To cut miters, I use a separate jig, see page 27.

MAKING THIS FIXTURE. Since this is a fixture for the radial arm saw (though you could adapt it for a power miter saw), I made it entirely on the radial arm saw. But if you have a table saw, you might find it easier and safer to rip the pieces on it.

BODY BLOCK & PINCH BLOCK

The stop block consists of two main parts: the body block and a pinch block. These pieces act together to make the block "stop" along the fence.

In order to make cutting these parts with the radial arm saw easier (and safer), I started out with an oversize piece of 1½"-thick stock for each of the blocks.

BODY BLOCK. To make the **body block (A)**, start with a 2½"-wide by 9"-long blank. Then cut a notch for the pinch block out of one end of the blank, see Fig. 1. To make this notch, set the radial saw blade ½" above the table and make a series of overlapping kerfs until you've formed a 2¾"-wide notch. Then smooth off any ridges left by the saw blade with a chisel, and cut the body block 4¾" long.

PINCH BLOCK. After the notch is cut in the body block, the next step is to make the **pinch block (B)**, refer to Fig. 3. To do this, cut an oversize blank to width to match the height of the notch in the body block (2").

To determine the length of the pinch block, position it in the notch of the body block with the ¾"-thick stock you'll be using for the fence sandwiched in between, see Fig. 2. Add a match book cover between the fence stock and the pinch block to act as a spacer for clearance. Now mark the pinch block and cut it to length, see Fig. 2.

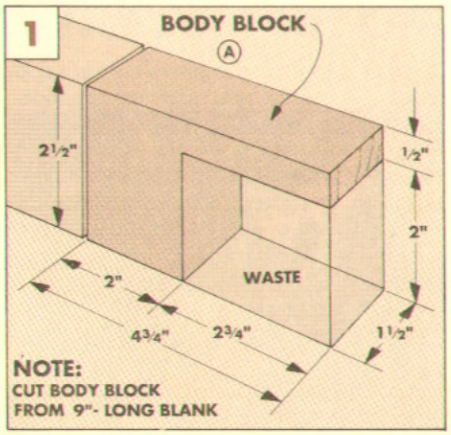

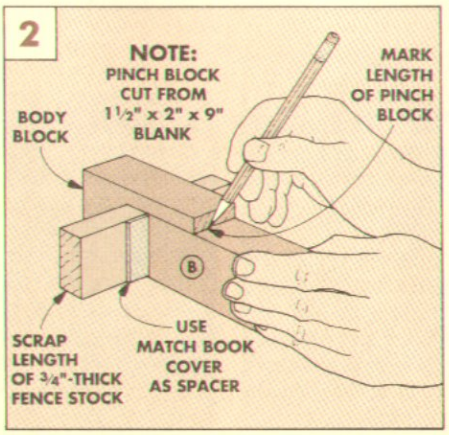

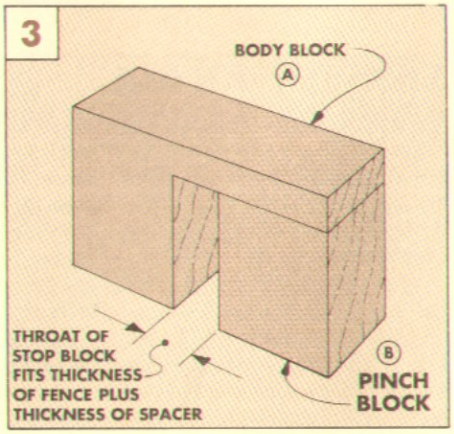

ASSEMBLY

With the body block (A) and pinch block (B) cut to size, you're ready to begin assembling the stop block. The pinch block is attached to the body block with a carriage bolt and wing nut, see Fig. 4. Tightening the wing nut pinches the block against the fence. To create the "pinching" action, the pinch block is beveled along its upper end, and hinged to the body block with a spline of 1/8" Masonite, see Fig. 4a.

CUT SPLINE KERFS. The spline fits in kerfs cut in both blocks, see Fig. 4. To cut these kerfs the same distance from the ends of both pieces, I butted the blocks against a stop clamped to the radial arm saw fence, see Fig. 5. Position this stop 1/2" from the saw blade and cut a 1/4"-deep kerf across the end of the body block (A), see Fig. 5. Then raise the saw blade and cut a 1/4"-deep kerf on the pinch block (B), see Fig. 6.

MAKE THE SPLINE. With the mating kerfs cut, the next step is to cut a spline to fit the kerfs, see Fig. 4. I cut the spline from 1/8" Masonite to a width of 1/2" and length of 1 1/2". Then temporarily assemble the body block (A) and the pinch block (B) with the spline in place.

DRILL BOLT HOLE. Next, to recess the head of the bolt, drill a 5/8" counterbore on the bottom of the pinch block, see Fig. 7. Then drill an oversize (5/16") shank hole through the body block and pinch block for the 1/4" x 3" carriage bolt, see Fig. 7a.

SAND THE BEVELS. Now, to create the pinching action, sand a bevel on the top edge of the pinch block, see Fig. 4a. Finally, to keep built-up sawdust from affecting the accuracy of the stop, sand another bevel on the lower inside edge of the body block, see Fig. 4.

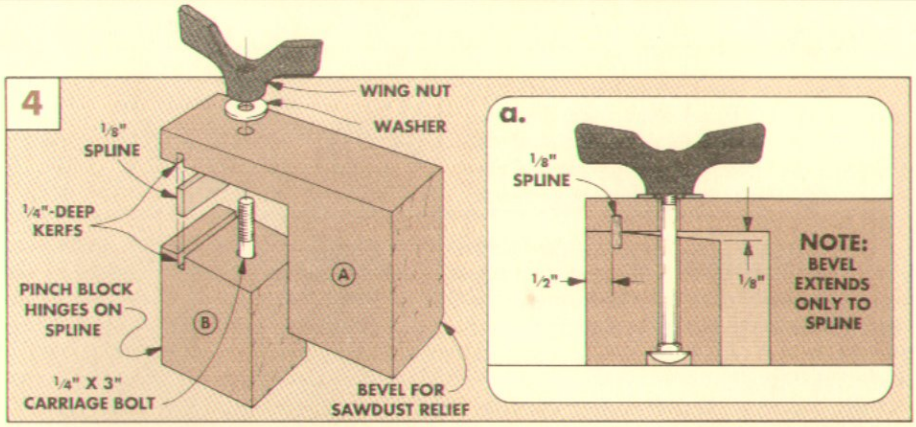

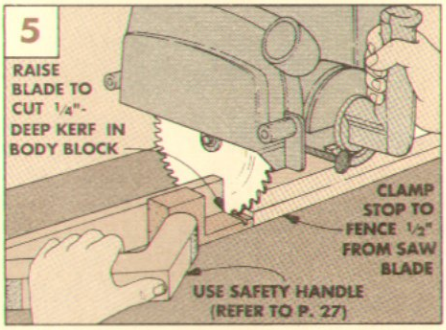

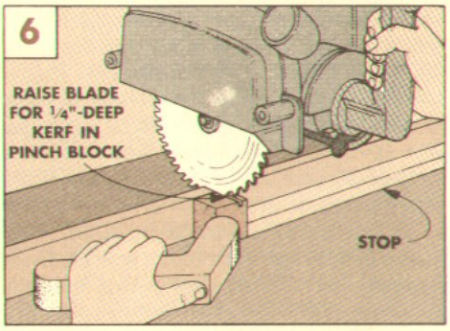

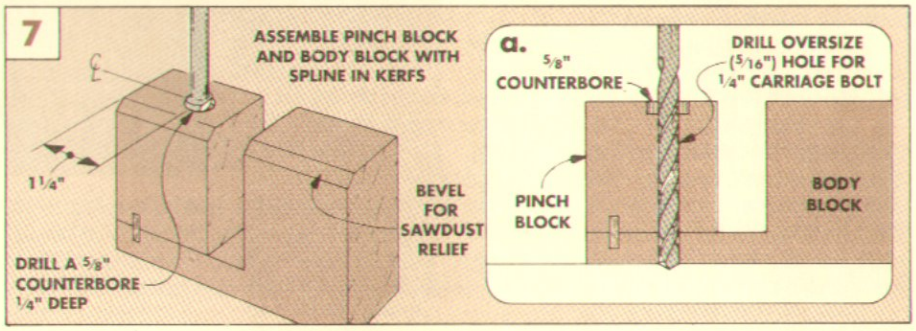

INDICATOR BLOCK

After the stop block is assembled, a triangular indicator block is glued to the side. This holds the hairline indicator that shows the position of the stop block on the fence.

BLOCK AND INDICATOR. To make the **indicator block (C)**, cut a triangle from 1 1/2" stock, refer to Fig. 9. Then, to make the **hairline indicator (D)**, cut a piece of 1/8" Plexiglas 1 1/4" wide and 2 1/8" long, see Fig. 8.

HAIRLINE. Next, scribe a hairline mark centered on the width of the Plexiglas using an X-Acto knife. To make it readable, fill the scribe line with black ink from a felt tip marker.

SCREW HOLE. To attach the Plexiglas, drill a 1/4" screw hole centered on its width and 1 1/4" down from the top. Note: This hole is larger than the screw to allow for adjusting the stop to the measuring tape later.

LIP. To prevent it from twisting as it's tightened, the hairline indicator rests on a **lip (E)** of 1/8" Masonite, see Fig. 9.

ASSEMBLY. Once the lip is cut to size, glue it to the front of the indicator block. Then glue the indicator block (C) to the left side of the body block (A), see Fig. 10. Finally, loosely screw the hairline indicator — marked side down — to the indicator block.

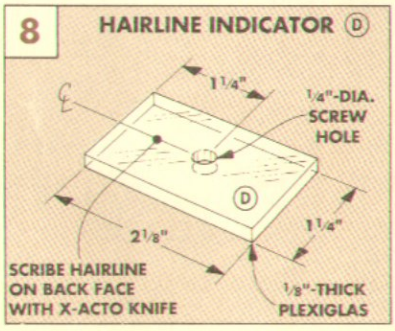

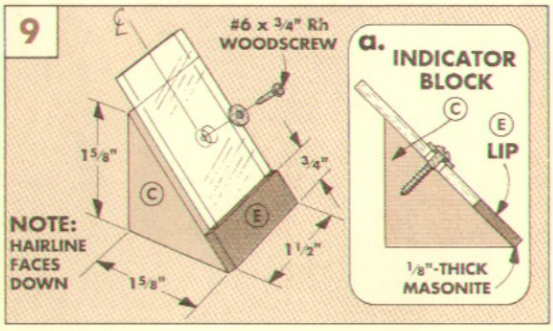

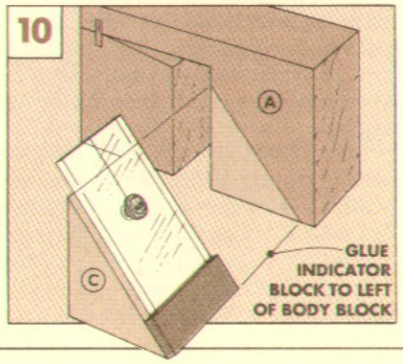

FENCE

With the stop block complete, work can begin on the radial arm saw fence. I cut the fence from ¾"-thick maple and chamfered the top front edge to provide a more direct line of sight when reading the tape measure, refer to Fig. 14.

RIP TO WIDTH. To determine the width (height) of the **fence (F)**, measure the thickness of your table and add the height of the throat opening in the stop block (2"), see Fig. 11. Now rip the fence to this combined width, see Fig. 12.

CUT TO LENGTH. Before cutting the fence to length, there are some decisions to be made. Since I wanted the majority of the fence to the *left* of the blade, the first decision was how far to go to the left. This is usually determined by the amount of room there is in the shop to the left of the radial arm saw (before a wall or another machine), or the size of the saw table. In my shop, there was enough room for a 50" fence on the left.

Then I had to decide the length of fence that will fit to the *right* of the saw blade (in my case, 30"). This made the total length of my fence 80". (Note: For more on adding a larger table to your saw or adding a support ledge for the fence, see page 26.)

CHAMFER. After the fence is cut to finished size, the next step is to cut a ⅝"-wide chamfer along the top edge for the measuring tape, see Fig. 12. To do this, I used a chamfering bit on the router table, see Fig. 12a, but you could bevel-rip this on the radial arm saw or table saw. (Shop Note: If you saw the chamfer, plane or sand out any saw marks so the self-adhesive measuring tape has a smooth surface to stick to.)

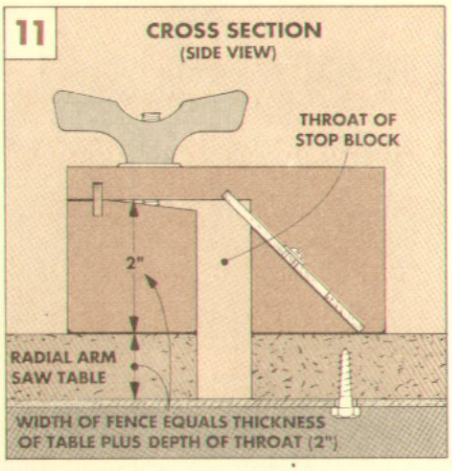

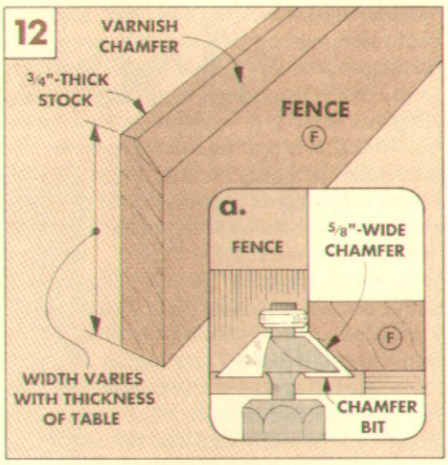

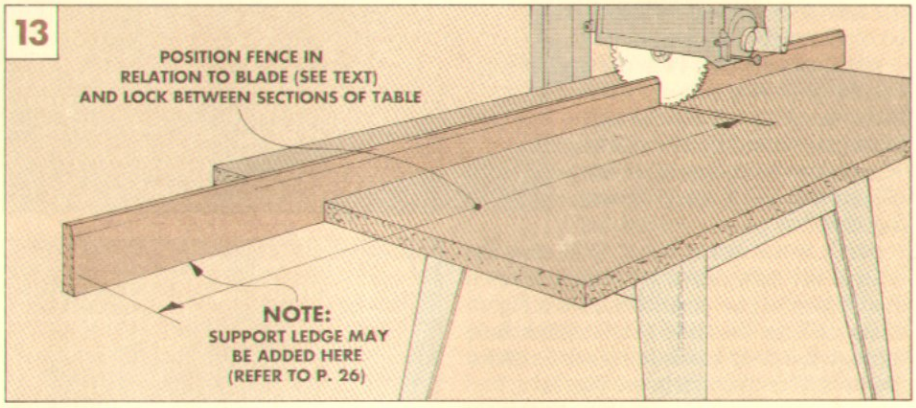

Next, I applied a coat of varnish to the chamfered edge of the fence. This provides a non-porous surface for permanently attaching the self-adhesive measuring tape .

INSTALL FENCE. Once the varnish dries, you can install the fence on the table, see Fig. 13. With the fence locked in place, cut a kerf through the fence to the depth of the table.

MEASURING TAPE

After the fence is installed in the table, the next step is to attach the measuring tape and "zero" the stop block.

ATTACH TAPE. To do this, first fit the stop block onto the fence. Then butt the right side of the stop block to the left side of the saw blade, see Fig. 14. Now, with the stop block clamped in this position, peel back a couple inches of the paper backing from the zero end of the measuring tape.

Then thread the tape under the Plexiglas indicator and position the "zero" point under the hairline, see Fig. 14. Now remove the rest of the backing and press the tape onto the fence. (You may have to cut the measuring tape to the length of your fence.)

FINE TUNE. Next, check the hairline indicator closely. If the hairline does not read exactly zero when the stop is touching the left side of the blade, loosen the screw that holds the Plexiglas in place. Then slide the Plexiglas until the hairline is over the zero and re-tighten the screw, see Fig. 15.

USING THE STOP BLOCK. Now comes the real test. Set the hairline for any measurement and cut off a piece of scrap. Then measure the test piece against the measuring tape — it should be exactly the same length as indicated by the hairline.

There's one more thing to keep in mind. Any time you remove the fence or replace the saw blade with one that's a different thickness (such as a thin kerf blade) re-adjust the hairline so it gives an accurate "zero" reading for the new blade.

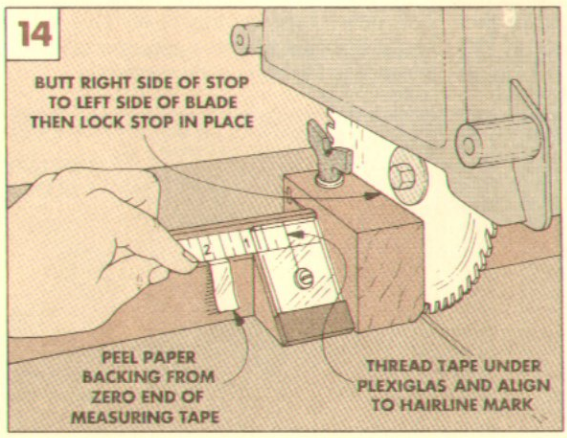

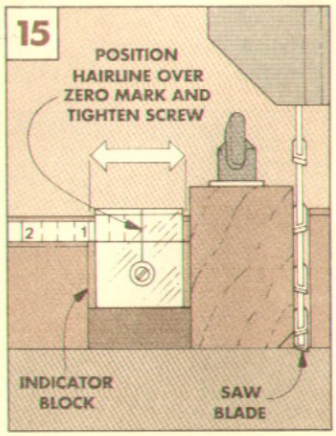

Sources

HALL TREE PATTERNS

Woodsmith Project Supplies is offering full-size patterns with instructions for making the bending jigs for the Hall Tree (featured on page 10). Included are plans for the leg jig, the S-hook jig and the ring jig.

Hall Tree Jig Patterns
772-200 Hall Tree Patterns $5.95

OVALHEAD PLUGS

We used wood ovalhead plugs to cover the counterbored screws on the Hall Tree (page 10) and the Fern Stand (page 20).

Woodsmith Project Supplies is offering these plugs in four different types of wood. They will fit a 3/8"-dia. hole and are only sold in packs of 25.

Ovalhead Plugs
772-100 Walnut Plugs.... $1.65
772-110 Oak Plugs..... $1.55
772-120 Cherry Plugs.... $1.65
772-130 Birch Plugs..... $1.25

DIAL CALIPERS

To accurately measure the thickness of thin strips of wood used in bent lamination projects, I use dial calipers. They're also handy for measuring stock as it comes out of the planer and the depth and width of holes. (For more on calipers, see page 25.)

Woodsmith Project Supplies is offering the same dial calipers that we use in the *Woodsmith* shop. They're machined from reinforced fiberglass so they're lightweight but strong. Included are a metal rod for measuring hole depth and jaws for both inside and outside measurements. The 1½"-long jaws open 6" wide.

The feature I like most about these calipers is the easy-to-read dial. Most of the calipers found in catalogs and stores have a dial that measures in hundredths of an inch (see Alternate Sources, below). Some of these also have an inside dial that reads in standard inch increments of 1/64".

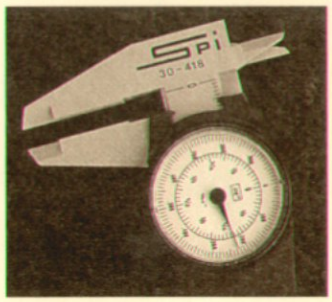

The dial calipers offered here are divided by 1/64" increments, but have another feature that's especially useful. Marked on the inner dial are divisions of eighths, quarters, and half inch. There are also bold hash marks at 1/16" intervals.

These marks and increments I find the most useful. When working with wood, I don't usually measure in hundredths of an inch. And I can't always recall that 40/64" is the same as 5/8". But by using this dial, I can quickly read a measurement that's easy to work with.

The accuracy of these calipers is plus or minus .0015" and the bezel is adjustable. Also, there's a drill and tap chart on the back. Finally, the calipers are held in a protective case.

Dial Calipers
772-300 Dial Calipers...$26.95

RADIAL ARM SAW STOP

Woodsmith Project Supplies is offering a hardware kit for the Radial Arm Saw Stop shown on page 28. The kit includes a clear Plexiglas hairline indicator, a large plastic wing nut, a self-adhesive measuring tape, and the other hardware necessary to build the Stop. (Note: Wood is not included.)

Radial Arm Saw Stop
772-400 Radial Arm Saw Stop Hardware Kit.....$12.95

- (1) ½" x 6 ft. Self-Adhesive Measuring Tape (Reads right to left)
- (1) 1/8" x 1¼" x 2⅛" Clear Plexiglas Hairline Indicator. (Hairline on the back side is etched and inked.)
- (1) ¼" x 3" Carriage Bolt
- (1) Large Plastic Wing Nut With Metal Insert, 3" Across Wings, Threaded To Accept Standard ¼"Bolt
- (1) ¼" I.D. Washer
- (1) #6 x ¾" Rh Screw
- (1) #6 Washer

MEASURING TAPE

There are a variety of uses for a self-adhesive measuring tape. (We're including one in the Radial Arm Saw Stop Kit above.) They can be mounted on benches, saw tables, and lathe beds.

The ½"-wide self-adhesive steel tape has black numbers and hash marks against a white background. **Woodsmith Project Supplies** is offering tapes that read from right to left and left to right. (Note: The right to left tape is 6 feet long and the left to right tape is 4 feet long.)

Measuring Tapes
772-410 Right To Left Measuring Tape, 6 ft. long $6.95
772-450 Left To Right Measuring Tape, 4 ft. long $5.95

LARGE WING NUTS

To secure the fences on the Miter Jig shown on page 27, we used large plastic wing nuts with metal inserts. You can build this jig with standard metal wing nuts, but we find these 3"-wide wing nuts easier to tighten. They're the same wing nuts we use on other jigs in our shop.

Woodsmith Project Supplies is offering these wing nuts to fit three different bolt sizes.

Large Wing Nuts
772-403 ¼"-20 ..... $1.65 ea.
766-211 5/16"-18..... $1.65 ea.
770-110 3/8"-16 ..... $1.65 ea.
10 or more of one size: $1.50 ea.

ORDER INFORMATION

BY MAIL

To order by mail, use the form enclosed with a current issue or write your order on a piece of paper, and send with a check or money order. (Include $3.50 handling and shipping charge with each order.) IA residents add 4% sales tax; CA residents add 6.25% sales tax. Send to:

Woodsmith Project Supplies
P.O. Box 10350
Des Moines, IA 50306

BY PHONE

For faster service use our Toll Free order line. Phone orders can be placed Monday through Friday, 8:00 AM to 5:00 PM Central Standard Time.

Before calling, have your VISA or Master Card ready.

1-800-444-7002

Allow 4 to 6 weeks for delivery. Note: Prices subject to change after February, 1990.

ALTERNATE CATALOG SOURCES

Similar hardware and supplies may be found in the following catalogs. Please call each company for a catalog or information.

Meisel Hardware Specialties
800–441–9870
Plugs

Trendlines
800–767–9999
Dial Calipers, Plugs, Tape

Woodcraft
800–225–1153
Dial Calipers, Tape

The Woodworkers' Store
612–428–2199
Dial Calipers, Plugs, Tape

Woodworker's Supply of NM
800–645–9292
Dial Calipers, Plugs, Tape

Cherry Tree Toys
614-484-4363
Plugs

Final Details

Stop Block

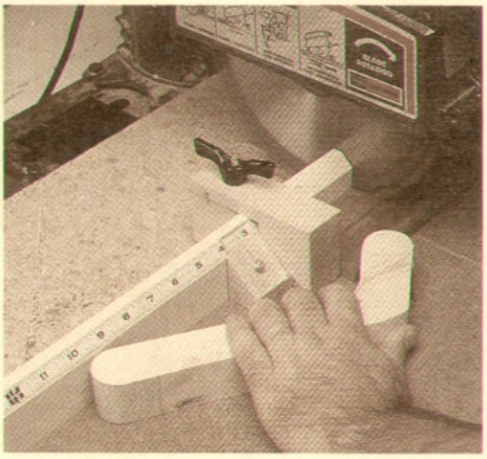

▲ *Attach this shop-made stop block to your radial arm saw to get accurate cuts every time. All you need is a 2x4 and a little bit of hardware.*

Fern Stand

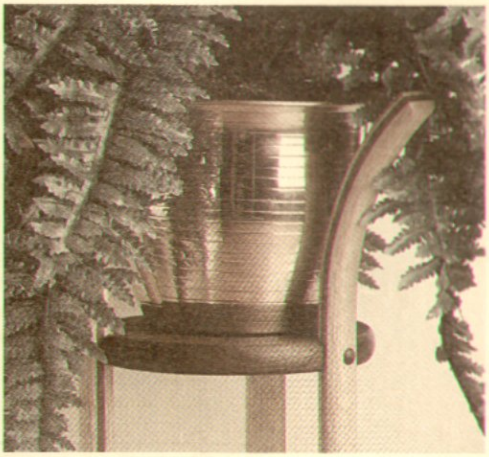

▲ *The graceful curves on this Fern Stand are highlighted by a walnut stripe. The stripe runs the length of each leg and matches the walnut shelves.*

Hall Tree

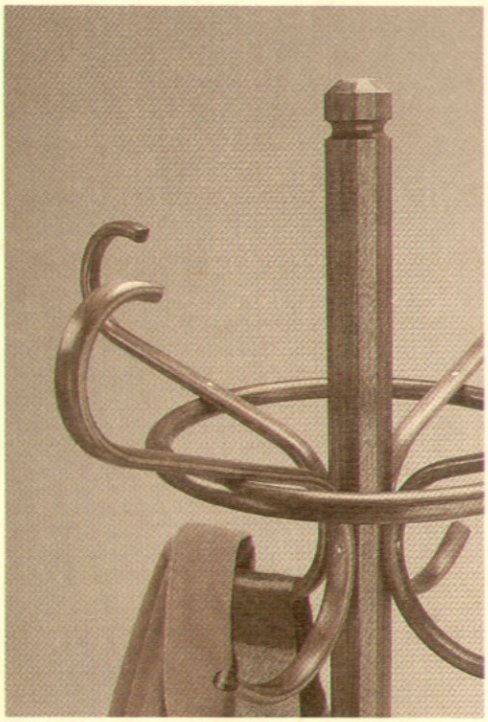

▲ *This Hall Tree is more than a place to hang your hat. It's a course in bent lamination — L-shaped legs, S-shaped hooks, and a ring.*

Bent Lamination

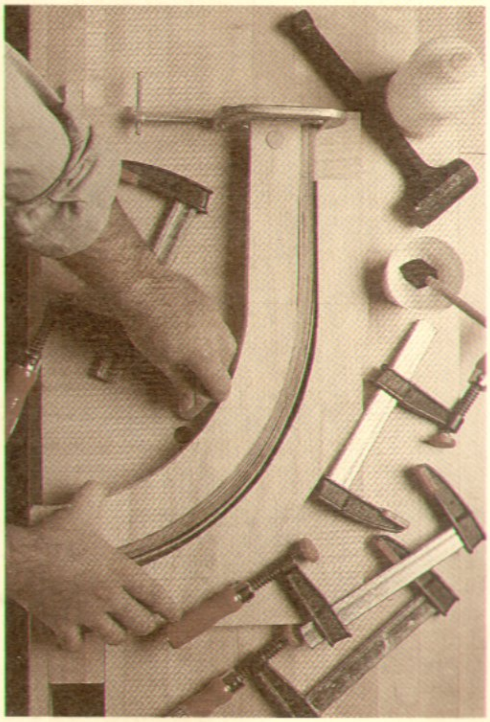

▲ *You don't need a lot of fancy tools to bend thin strips of wood. Once the jig is made all that's needed are clamps, glue, and some patience.*